KNOTT
AUTÓFLEX-GROUP

There is no trailer without us!

2022
PRODUCT CATALOGUE

www.autoflex-knott.com

If you build a trailer, if you fix one, you will find everything you need at KNOTT-AUTOFLEX!

KNOTT AUTÓFLEX-GROUP

www.autoflex.hu

KNOTT AUTÓFLEX-GROUP

COUPLING HEAD 3

TOWING EYE 13

UNBRAKED DRAWBAR 17

OVERRUN DEVICE 25

ADJUSTABLE HEIGHT COUPLING 35

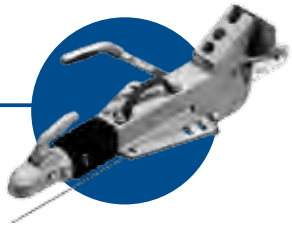

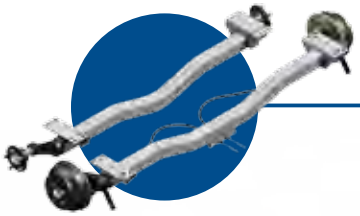

UNBRAKED AXLES 41

BRAKED AXLES 49

RIGID AXLES 75

AGRICULTURAL AXLE 85

SPIRAL SPRING AXLE 91

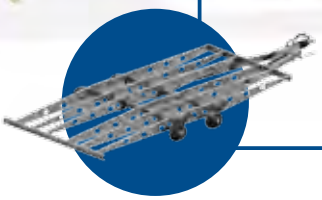

CHASSIS 97

CLAMP 105

PROP STAND & JOCKEY WHEEL 111

MUDGUARD 131

VEHICLE FASTENERS, ACCESSORIES 139

WINCHES, ROLLERS, PLASTIC PARTS 155

LIGHTING 175

K30-U UNIVERSAL BALL COUPLING

FITS ALL TRAILERS!

KNOTT AUTÓFLEX-GROUP

COUPLING HEAD

OUR COUPLERS

Autoflex-Knott couplers are safe and easy to use

All Knott ball couplers are equipped with safety check indicator.
The red-green-red label shows the position of the computer.

- **–** (red) uncoupled
- **+** (green) coupled
- **x** (red) open

1. Uncoupled (empty)

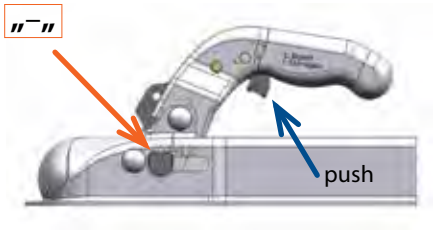

2. Open

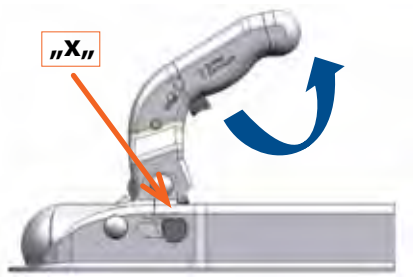

3. Coupled (pushed)

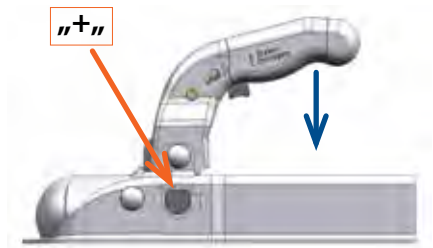

Coupling and uncoupling

Uncoupling: Push the trigger and pull the coupling handle upwards. The coupling is now released and will automatically remain open during which the indicator button stays in the red field with the large "X" in it.

Do not drive the trailer in this position!

Coupling: Place the ball coupler (that should be in an open position marked with X) on the top of the hitch-ball of the tow vehicle, which, if applied correctly, produces a short clicking sound.
When the ball coupler is adjusted properly, the indicator automatically jumps to the green zone marked with (+).

If the indicator is in the red zone marked with (–), the coupling is not applied properly on the tow vehicle. In this case it is prohibited to tow the trailer!

For more information, please read the service book.

The ball coupler's pivot range is max ±25° around the vehicle's longitudinal axis. It can swing within a range of ±20° on the horizontal plane.

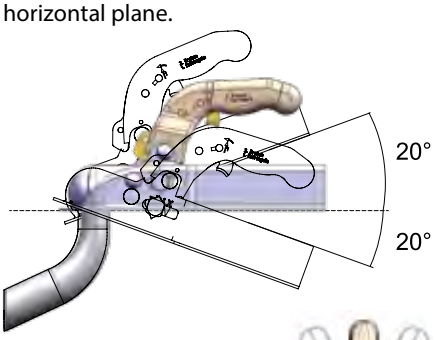

The coupler can be blocked in both disconnected and connected state.

Advantages:

- material steel plate or cast iron
- surface treatment galvanization
- the product went through a 500 hours salt spray test
- comfortable to handle (different types are available)
- easy to use with the trigger
- lockable in both disconnected and connected state
- has a safe construction

Additional parts:

- plug holder
- coupler lock
- protector
- safety ball

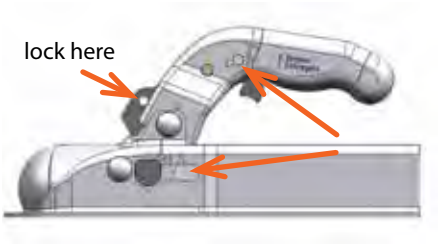

K 7,5 Coupling head for ISO/50

Type	Joint size (mm)	ECE number	Art. nr.
K7.5CN3	Ø 50 vertical	55R-011040	6E0083.023
K7.5DN3	Ø 60 vertical	55R-011040	6E0083.029
K7.5EN3	Ø 70 vertical	55R-011040	6E0083.033
K7.5FN3	⧄ 40 horizontal	55R-011040	6E0081.005
K7.5GN3	⧄ 45 horizontal	55R-011040	6E0081.013
K7.5HN3	⧄ 50 horizontal	55R-011040	6E0081.021
K7.5IN3	⧄ 60 horizontal	55R-011040	6E0081.031
K7.5JN3	⧄ 70 horizontal	55R-011040	6E0081.037
K7.5KN3	⧄ 50 vertical	55R-011040	6E0081.045
K7.5LN3	⧄ 60 vertical	55R-011040	6E0081.053
K7.5MN3	⧄ 70 vertical	55R-011040	6E0081.061
K7.5NN3	⧄ 50 horizontal / vertical	55R-011040	6E0081.072
K7.5ON3	⧄ 60 horizontal / vertical	55R-011040	6E0081.080
K7.5PN3	⧄ 70 horizontal / vertical	55R-011040	6E0081.088
K7.5RN3	⧄ 45 vertical	55R-011040	6E0081.090
K7.5SN3	⧄ 40 vertical	55R-011040	6E0081.091

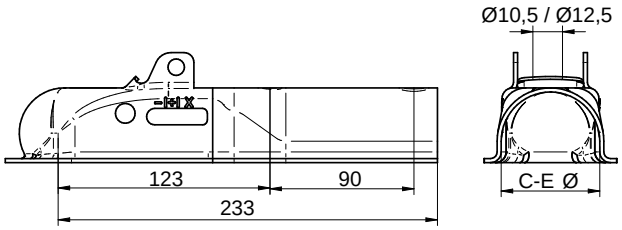

- Max. load: 750 kg
- D-value: 7,2 kN
- Vertical load capacity: 75 kg
- Material: steel

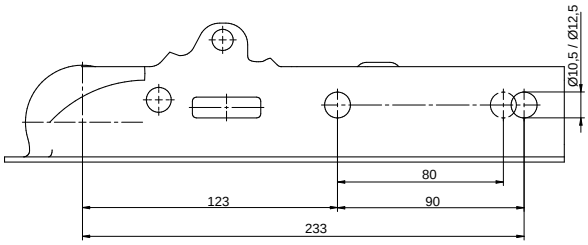

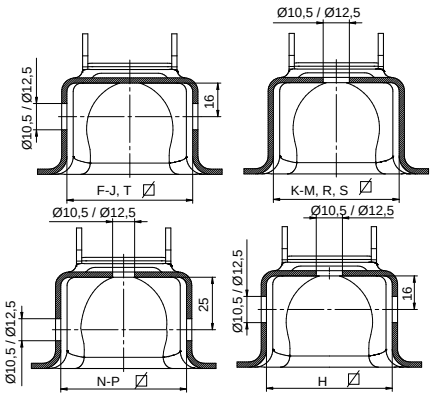

K 14 Coupling head for ISO/50

Type	Joint size (mm)	ECE number	Art. nr.
K14AN3	Ø 50 vertical	55R-010505	6E0031.002
K14BN3	Ø 60 vertical	55R-010505	6E0031.004
K14CN3	Ø 70 vertical	55R-010505	6E0031.006

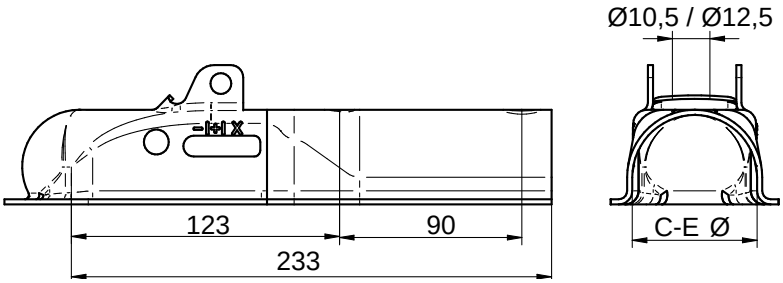

KK 14 Coupling head for ISO/50

Type	Joint size (mm)	ECE number	Art. nr.
KK14AN3	Ø 50 horiz./vert.	55R-023170	6E0040.002
KK14BN3	Ø 45 horiz./vert.	55R-023170	6E0040.004
KK14CN3	Ø 36 horiz./vert.	55R-023170	6E0040.006

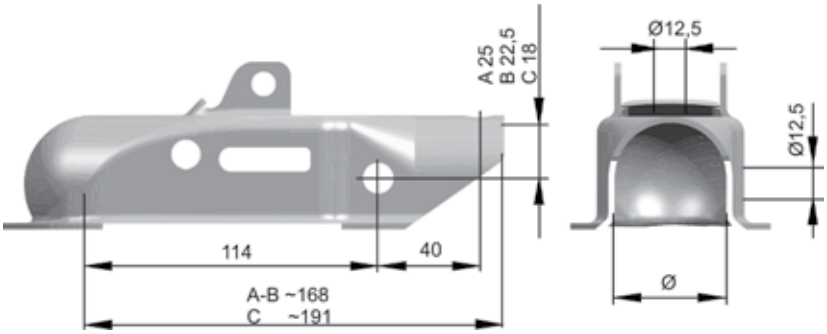

- Max. load: 1400 kg
- D-value: 13,2 kN
- Vertical load capacity: 100 kg
- Material: steel

KQ 14 Coupling head for ISO/50

Type	Joint size (mm)	ECE number	Art. nr.
KQ14AN3	⌀ 50 horizontal	55R-010510	6E0042.004
KQ14BN3	⌀ 60 vertical	55R-010510	6E0042.006
KQ14CN3	⌀ 70 vertical	55R-010510	6E0042.010

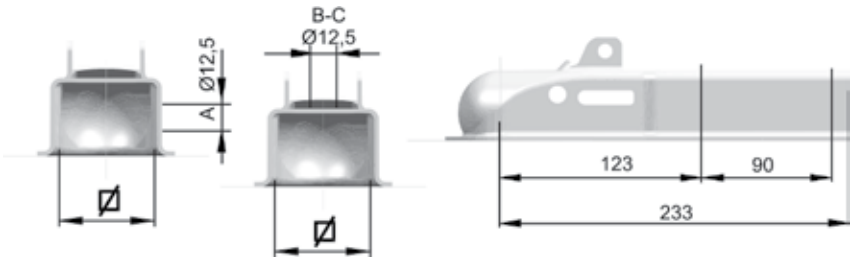

K 20 Coupling head for ISO/50

Type	Max. load capacity	D-Value	Vert. load capacity	Joint size (mm)	Material	ECE number	Art. nr.
K20AN3	2000 kg	18,5 kN	100 kg	Ø 50 horiz./vert.	steel	55R-022094	6E0045.002
K20BN3	2000 kg	18,5 kN	100 kg	Ø 45 horiz./vert.	steel	55R-022094	6E0045.004

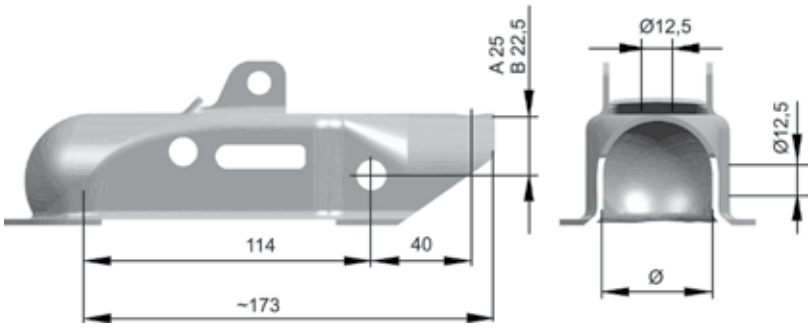

K 27 Coupling head for ISO/50

Type	Joint size (mm)	ECE number	Art. nr.
K27AN3	Ø 50 horizontal/vertical	55R-022122	6E0019.004
K27BN3	Ø 45 horizontal/vertical	55R-022122	6E0019.008
K27SA	Ø 50 horizontal/vertical	55R-022122	6E5302.001

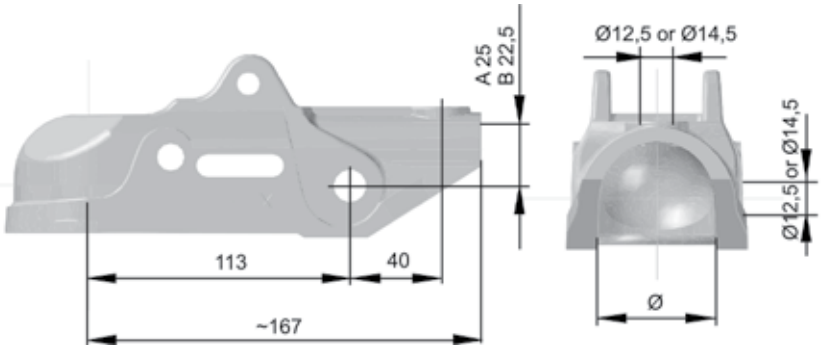

- Max. load capacity: 2700 kg
- D-value: 25 kN
- Vert. load capacity: 250 kg
- Material: cast iron

K 30U Coupling head for ISO/50

Type	Joint size (mm)	ECE number	Art. nr.
K30UN3	Ø 50 horiz./vert. (12.5)	55R-022507	6E0350.001
K30UN3	Ø 50 horiz./vert. (12.5)	55R-022507	6E0350.002

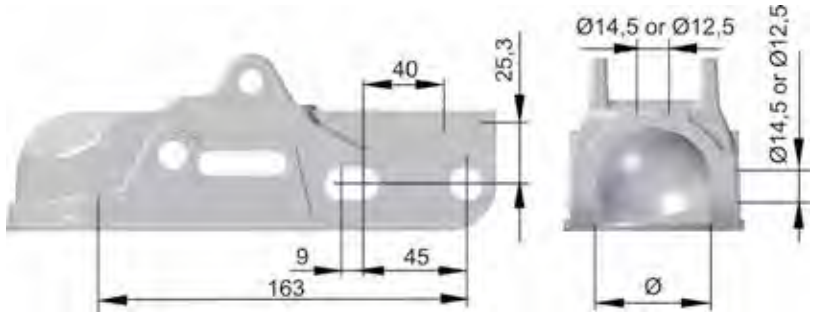

- Max. load capacity: 3000 kg
- D-value: 27 kN
- Vert. load capacity: 300 kg
- Material: cast iron

AV 30, 35 Coupling head for ISO/50

Type	Joint size (mm)	X size (mm)	Y size (mm)	ECE number	Art. nr.
AV 30 A	Ø50 horizontal/vertical	Ø12,5	Ø12,5	55R-011521	202980.001
AV 30 A	Ø50 horizontal/vertical	Ø14,5	Ø12,5	55R-011521	202980.002
AV 30 A	Ø50 horizontal/vertical	Ø14,5	Ø14,5	55R-011521	202980.003
AV 35	Ø60 horizontal/vertical	Ø14,5	Ø14,5	55R-011520	203001.001

K 35 Coupling head for ISO/50

Type	Max. load capacity	D-Value	Vert. load capacity	Joint size (mm)	d	D	Material	ECE number	Art. nr.
K35AN3	3500 kg	31 kN	200 kg	Ø50 horiz./vert.	12,5	12,5	cast iron	55R-022121	6E0018.004
K35BN3	3500 kg	31 kN	200 kg	Ø45 horiz./vert.	12,5	12,5	cast iron	55R-022121	6E0018.010
K35CN3	3500 kg	31 kN	250 kg	Ø60 horizontal	14,5	14,5	cast iron	55R-022121	6E0077.002
K35CN3	3500 kg	31 kN	250 kg	Ø60 horiz./vert	14,5	14,5	cast iron	55R-022121	6E5356.001

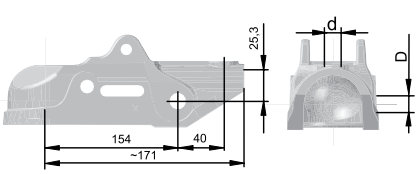

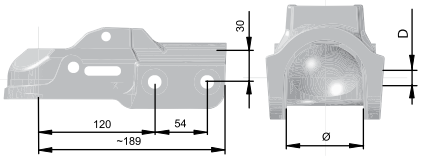

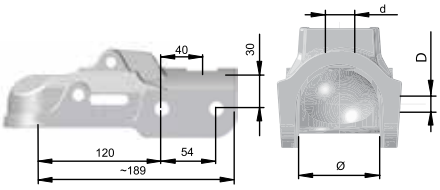

AKFW 7,5 Coupling head for ISO/50

Type	Max. load capacity	D-Value	Vert. load capacity	Joint size (triangle)	Material	ECE number	Art. nr.
AKFW7,5AN3	750 kg	7,2 kN	75 kg	23,6° 2 × vertical	steel	55R-012469	6E0071.001

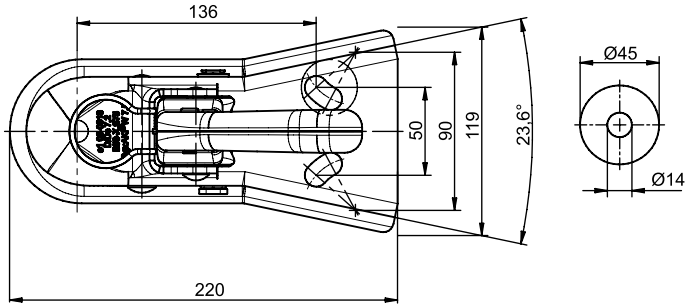

KS25-30-35 Coupling head

Type	Max. load capacity	D-value	Max. vert. load capacity	Joint size (mm)	Material	ECE number	Art. nr.
KS25	2500 kg	27 kN	250 kg	50	cast iron	55R-012928	210197.003
KS30	3000 kg	27 kN	300 kg	50	cast iron	55R-012930	209927.003
KS35	3500 kg	31 kN	350 kg	60	cast iron	55R-012931	210207.001

WK30-35 Coupling head

Type	Max. load capacity	D-value	Max. vert. load capacity	Joint size (mm)	Material	ECE number	Art. nr.
WK30-A	3000 kg	27 kN	300 kg	50	cast iron	55R-012051	6E0415.001
WK35-A	3500 kg	27 kN	350 kg	60	cast iron	55R-012052	6E0492.001

2″ Coupling head

Trailer GVW	Ball size (inch)	Vert. load capacity	Tongue (inch)	Art. nr.
3500	2″	165 Lbs	2″	6X1393.008
3500	2″	165 Lbs	21/2″	6X1393.009
3500	2″	165 Lbs	3″	6X1393.010
3500	2″	220 Lbs	2″	6X1393.004
3500	2″	220 Lbs	21/2″	6X1393.005
3500	2″	220 Lbs	3″	6X1393.006

- SAE Class: II
- Construction: stamped steel

These type of couplers are sold on the USA market.

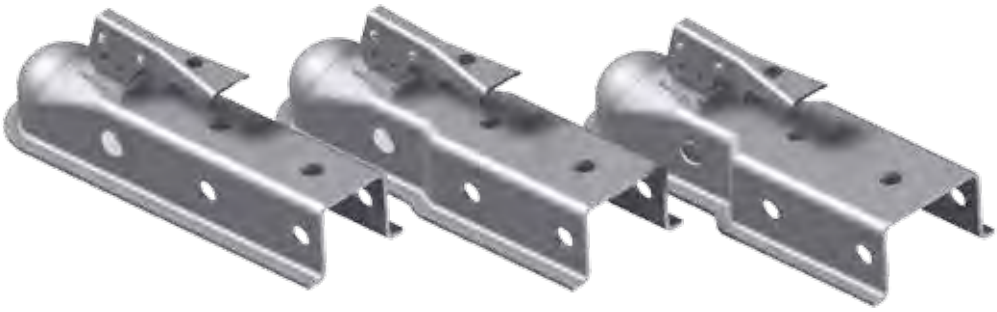

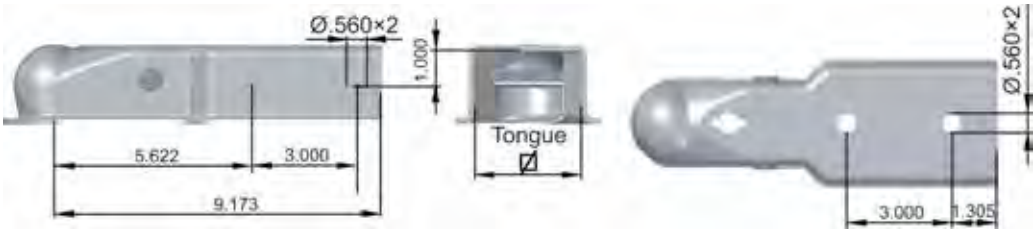

BQ 27 Coupling head

Type	Max. load capacity	D-Value	Vert. load capacity	Material	ECE number	Art. nr.
BQ-27	2700 kg	24,43 kN	150 kg	cast iron	55R-011478	6E0286.001

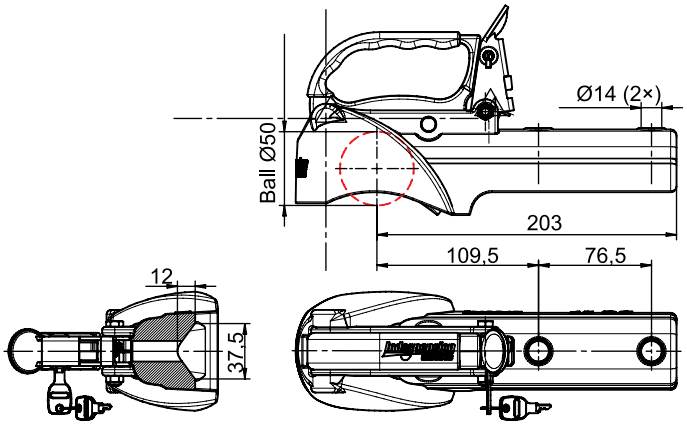

- Lockable
- Soft dock + lock included

COUPLING HEAD ACCESSORIES

№	Description	Colour	Used for	Art. nr.
1	Soft dock	black	K27, K35	6X0078.001
2	Soft dock	blue	K7,5, KK14-K20	6X0078.002
3	Soft dock	black	K7,5, KK14-K20	6X0078.006
4	Soft dock	black	sheet 2,5 mm	6X0078.008
5	Safety ball	blue	all	203467.001

■ Customer logo is available

1.

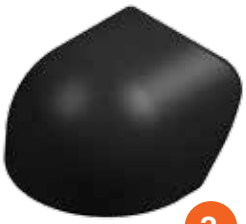
2.

3.

4.

5.

Locks for coupling heads

№	Description	Coupling head type	Art. nr.
1	Lock for coupling head VZ-2,5	K7,5	6X0002.001
2	Lock for coupling head VZ-4	K14/KQ14/KK14	6X0002.002
3	Lock for coupling head VZ-5	K20	6X0002.003
4	Lock for coupling head	K27/K35	6X0002.004
5	Lock for coupling head VZ-12	K27/K35	6X0002.005
6	Lock for coupling head	all	6X0002.011
7	Lock for coupling head	KS25/KS30/KS35	210174.001

1.

2.

3.

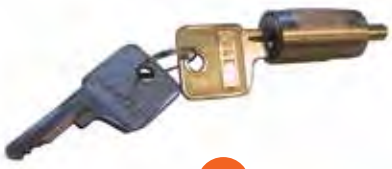
4.

5.

6.

■ This lock is designed to fit into all coupling head with a keyhole shape slot in the handle and will prevent the handle from being lifted to release the coupling.

7.

TOWING EYE

TOWING EYE

for all Overrun Coupling

"DIN" Version

№	A Ø mm	B Ø mm	C Ø mm	D mm	F mm	G Ø mm	ECE number	Art. nr.
1	45	12,5	12,5	40	20	115	55R-012026	98761693
1	50	12,5	12,5	40	20	115	55R-012026	98949393
1	50	12,5	14,5	40	20	115	55R-012026	98949493
1	50	14,5	14,5	40	20	115	55R-012026	98761993
2	60	14,5	14,5	54	22	124	55R-010681	98762093

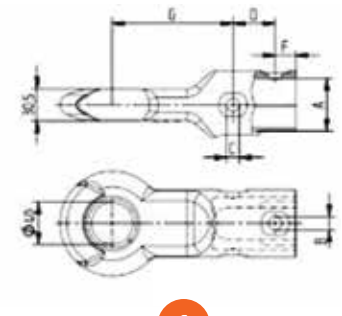

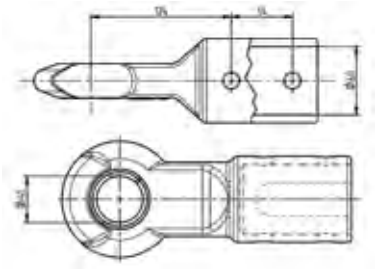

- Type: DIN 74054-40A
- Max. load capacity: 3500 kg
- D-value: 31 kN
- Vertical load: 350 kg
- Material: forged steel

"NATO" Version

№	A Ø mm	B Ø mm	C Ø mm	D mm	F mm	G Ø mm	ECE number	Art.nr.
1	45	12,5	12,5	40	16	124	55R-012124	98762193
1	50	12,5	12,5	40	16	124	55R-012124	9896059X
1	50	12,5	14,5	40	16	124	55R-012124	9895789X
1	50	14,5	14,5	40	16	124	55R-012124	98762793
2	60	14,5	14,5	54	22	124	55R-012123	98762393

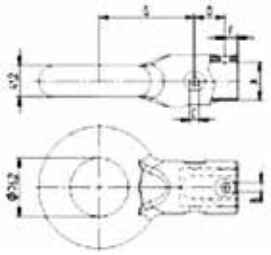

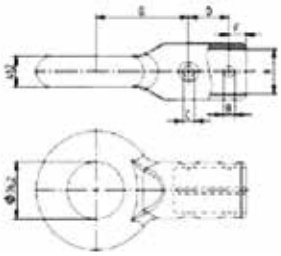

- Type: NATO VG74059
- Max. load capacity: 3500 kg
- D-value: 31 kN
- Vertical load: 350 kg
- Material: forged steel

"French" Version

Type	A Ø mm	B Ø mm	C Ø mm	D mm	F mm	G Ø mm	ECE number	Art. nr.
French Ø 68-25	45	12,5	12,5	40	20	110	55R-011109	200590.001
French Ø 68-25	50	12,5	12,5	40	20	110	55R-011109	200590.003
French Ø 68-25	50	12,5	14,5	40	20	110	55R-011109	200590.004
French Ø 68-25	50	14,5	14,5	40	20	110	55R-011109	200590.002

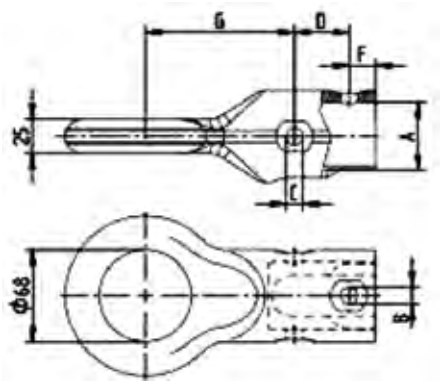

Type	A Ø mm	B Ø mm	C Ø mm	D mm	F mm	G Ø mm	ECE number	Art. nr.
French Ø 68-42	45	12,5	12,5	40	15	95	55R-012272	98789793
French Ø 68-42	50	12,5	14,5	40	15	95	55R-012272	202723.001
French Ø 68-42	50	14,5	14,5	40	15	95	55R-012272	98826093

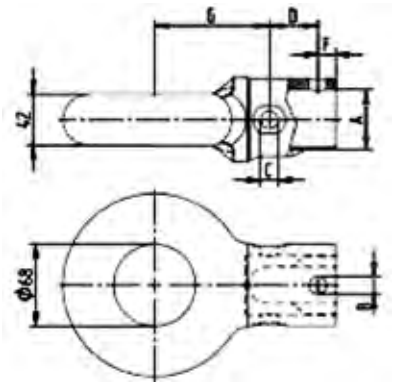

- Max. load capacity: 3500 kg
- D-value: 31 kN
- Vertical load: 350 kg
- Material: forged steel

KNOTT AUTÓFLEX-GROUP

Our packaging method will change in the future:

we will use cardboard boxes instead of the old wooden boxes

ADVANTAGES of cardboard boxes:

- high quality packing with clearly visible logo
- practical as it needs less space after use
- easy to use for workers – there is no splinter after cutting out its side, it is easier to bend down to the box

- environment friendly – less wood has to be chopped down for its production
- inside reinforcement makes it more stable also during transport
- won't be fungous

Dimensions: 1200 × 800 × 900 mm

www.autoflex.hu

There is no trailer without us!

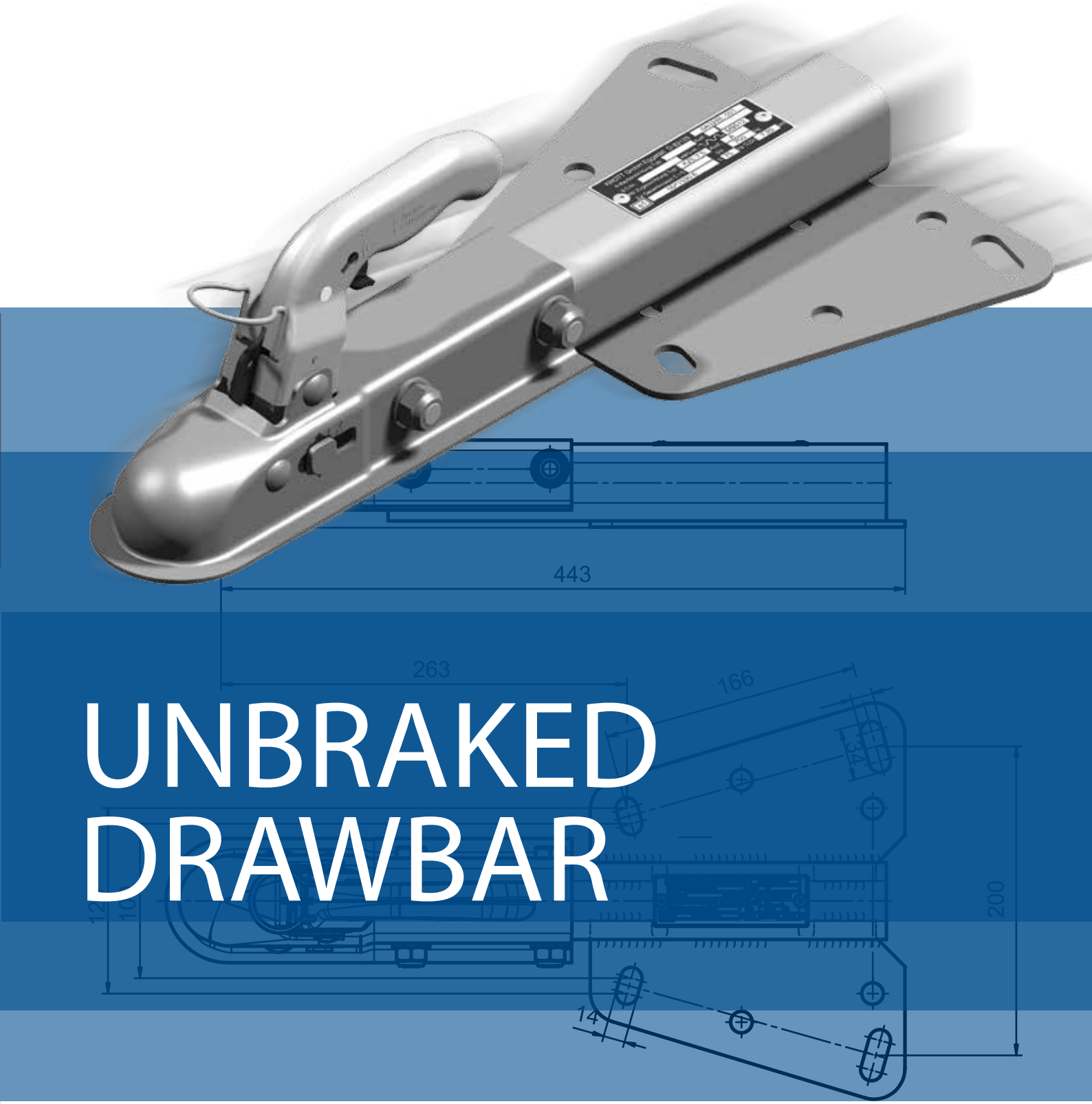

UNBRAKED DRAWBAR

UNBRAKED DRAWBAR

KZE 7,5 "V flange" drawbar

Type	Coupling head	Dc-value (kN)	Vertical load 'S' (max. kg)	GVWR (kg)	ECE number	Art. nr.
KZE 7,5	K7,5HN3	7,2	75	750	55R-021530	6A2077.001
KZE 7,5	K7,5KN3	7,2	75	750	55R-021530	6A3248.003
KZE 7,5	K7,5LN3	7,2	75	750	55R-021530	6A8528.001
KZE 7,5	K7,5LN3	7,2	75	750	55R-021530	6BG801.001

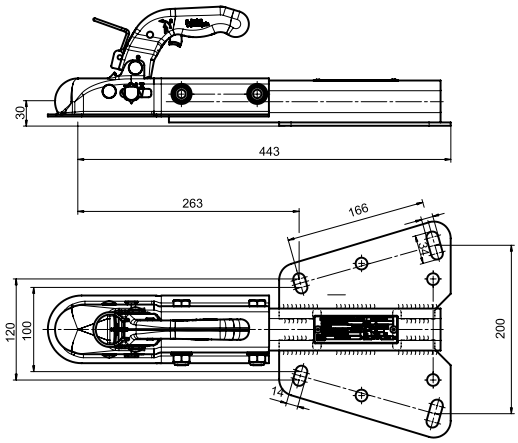

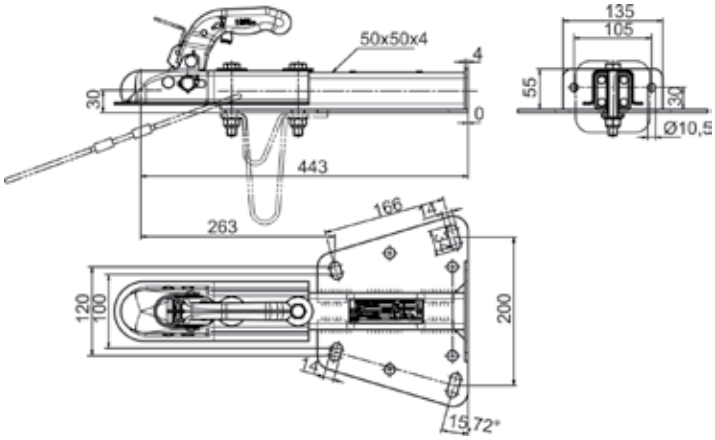

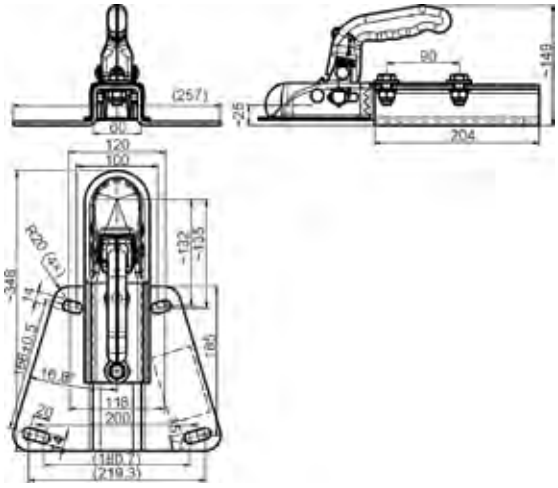

"A" frame drawbar (welded version)

Type	D-value (kN)	Vert. load. (max. kg)	FDL	C (mm)	V (mm)	ECE number	Drawing number {recommendation}
ZHL 15	17	100	1500 kg / 2500 mm	130/166	1195	55R-010565	6A4719
ZHL 20	22	100	2000 kg / 2500 mm	166/207	931	55R-010579	6A5280
ZHL 27	31	300	3000 kg / 1285 mm	166/207	1023	55R-010300	6A4003
ZHL 35	31	350	3500 kg / 1800 mm	166/207	1260	55R-010729	6A4790

■ Version: C

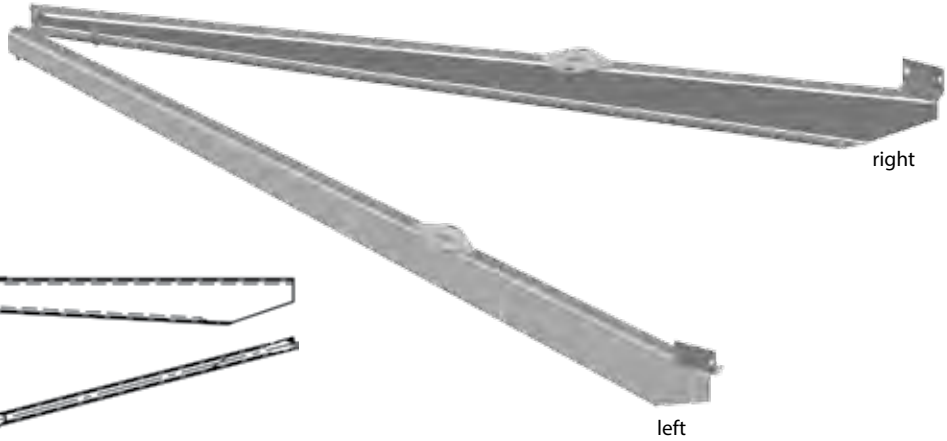

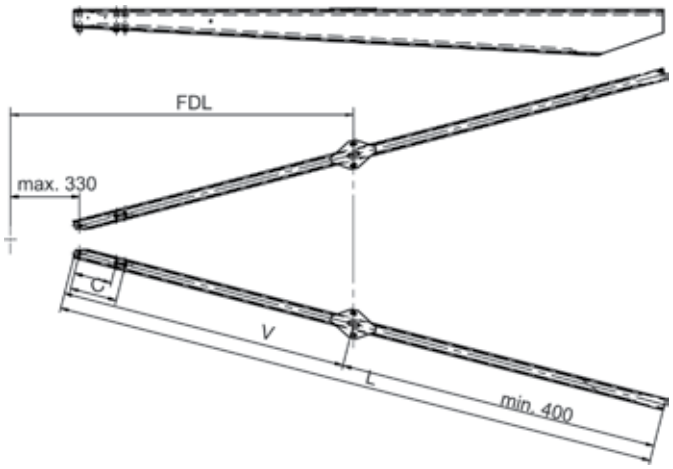

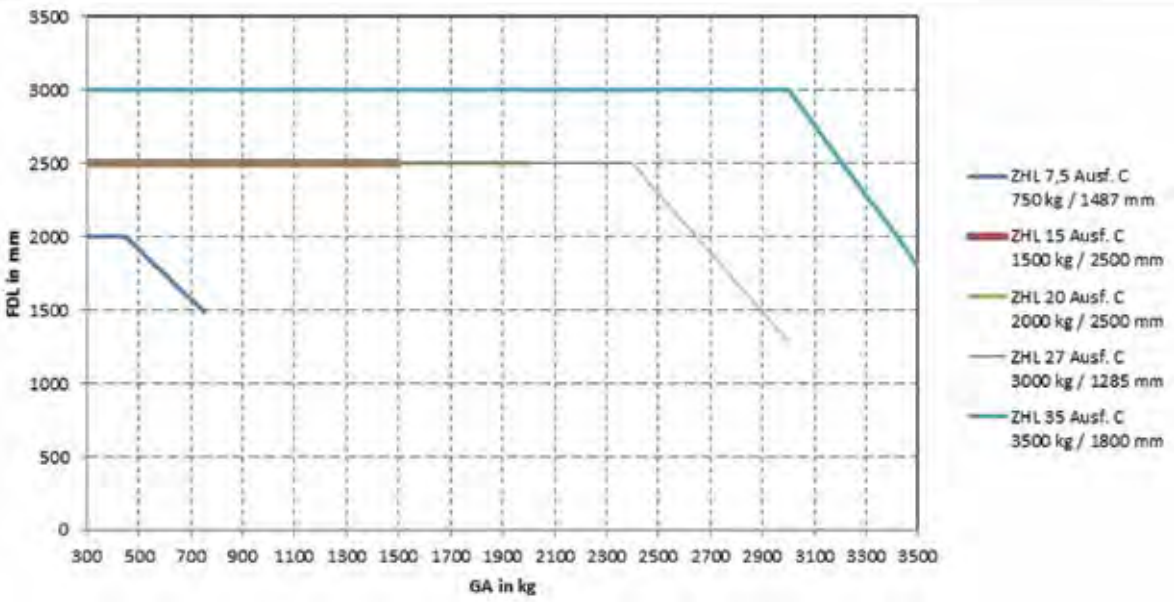

"A" frame drawbar (mountable version)

Type	D-value (kN)	Vert. load. (max. kg)	FDL	C (mm)	V (mm) (recommendation)	ECE number	Drawing number (recommendation)
ZHL 7,5	7,2	75	750 kg / 2000 mm	130 or 166	1267	55R-011960	6B4465
ZHL 15	17	100	1800 kg / 2500 mm	130 or 166	910-1210	55R-010565	6A4507
ZHL 20	22	100	2400 kg / 2500 mm	166/207	910-1210	55R-010579	6A1136
ZHL 27	31	300	3500kg / 1800 mm	166/207	910-1210	55R-010300	6A1176
ZHL 35	31	350	3500 kg / 2500 mm	166/207	1130-1430	55R-010729	6A2775

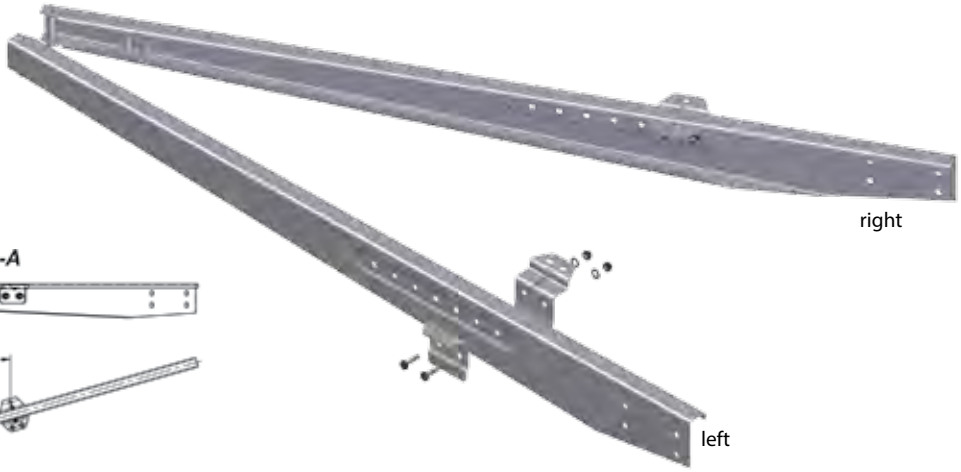

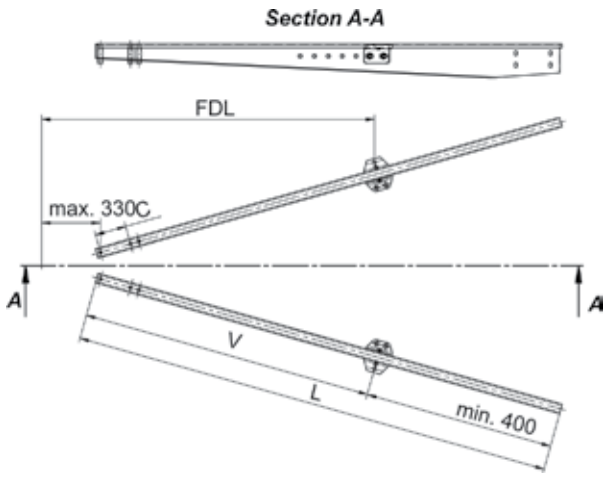

- Version: A
- L (min-max): 1500 - 3000 mm

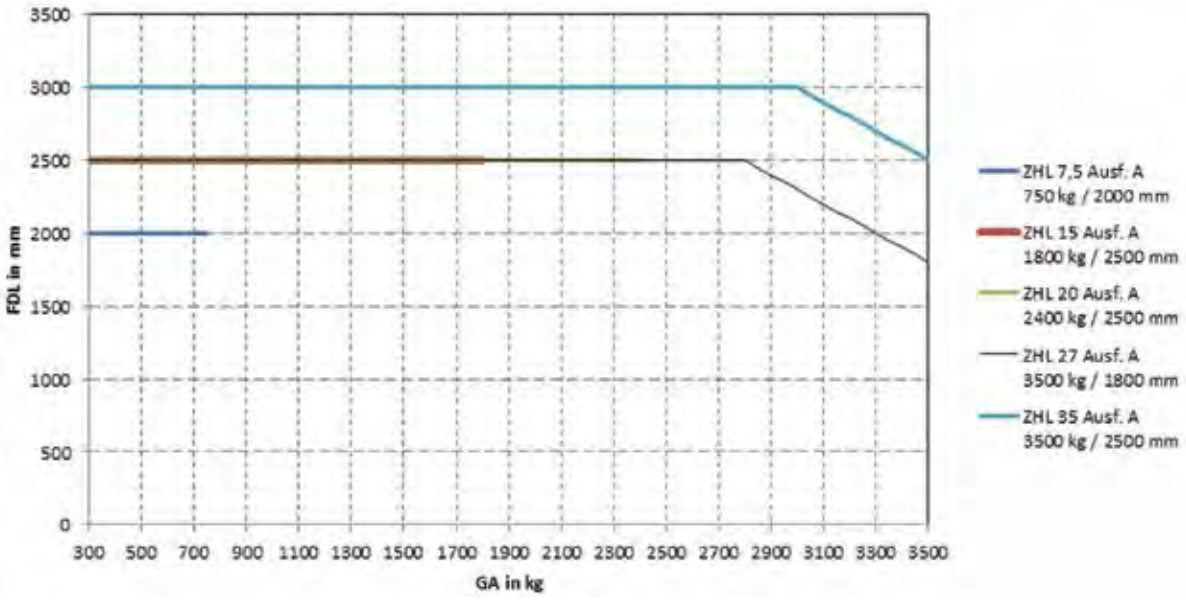

Round drawbar

Type	E (mm)	FDL (mm)	D (mm)	B (mm)	"L" (mm) Standard	"L" (mm) max.	ECE number	Art. nr.
KDR70	-	1390	160	Ø70×4	2000	6108	55R-010887	6A1246.004
KDRK70 cranked	100	1365	160	Ø70×4	2000	5800	55R-010947	6A1248.001

- Coupling head: K14CN3
- Vert. load: 75 kg
- GVWR: 750 kg

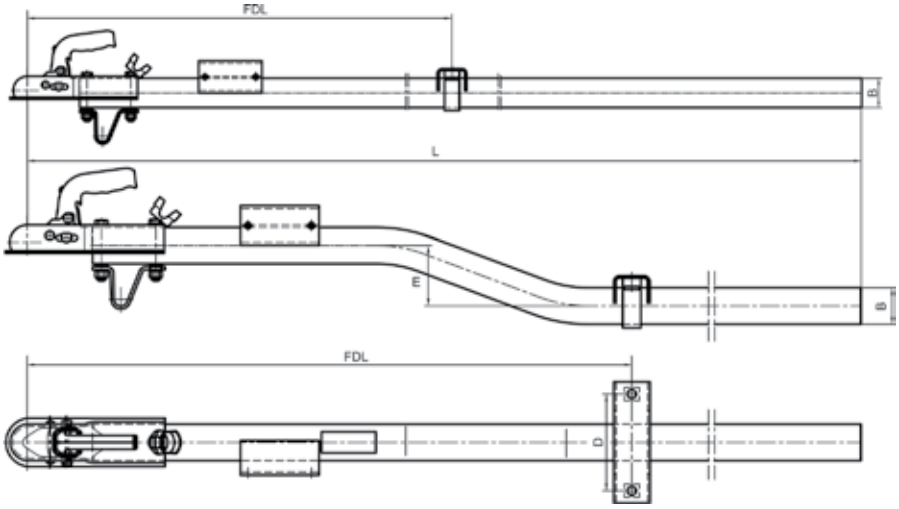

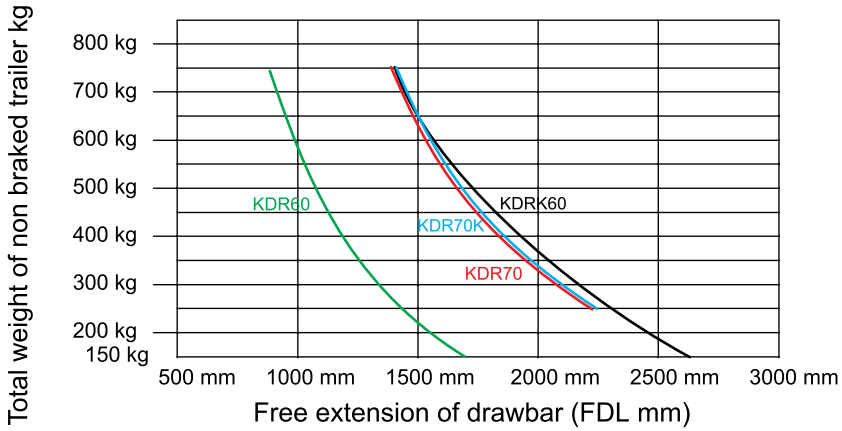

KDVU 60 Square drawbar

Type	FDL (mm)	D (mm)	B (mm)	L (mm)	Art. nr.
KDVU60-B	1227	130	60×60×3	2000	205601.001
KDVU60-B	1227	130	60×60×3	2500	205601.002
KDVU60-B	1227	130	60×60×3	3000	205601.003

Type	FDL (mm)	D (mm)	B (mm)	L (mm)	Art. nr.
KDVU60-B cranked	1227	130	60×60×3	2000	205930.001
KDVU60-B cranked	1227	130	60×60×3	2500	205930.002
KDVU60-B cranked	1227	130	60×60×3	3000	205930.003

- Coupling head: K7,5LN3
- Vert. load: 75 kg
- GVWR: 750 kg
- ECE-number: **55R-011877**

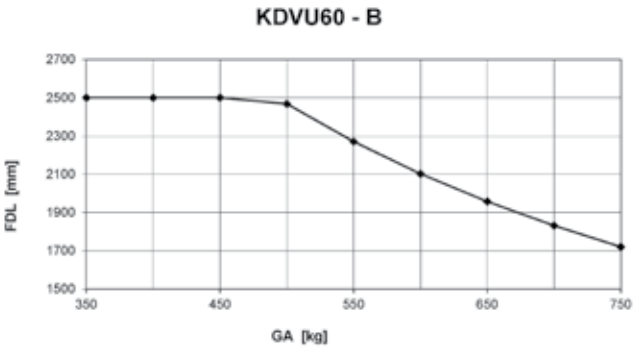

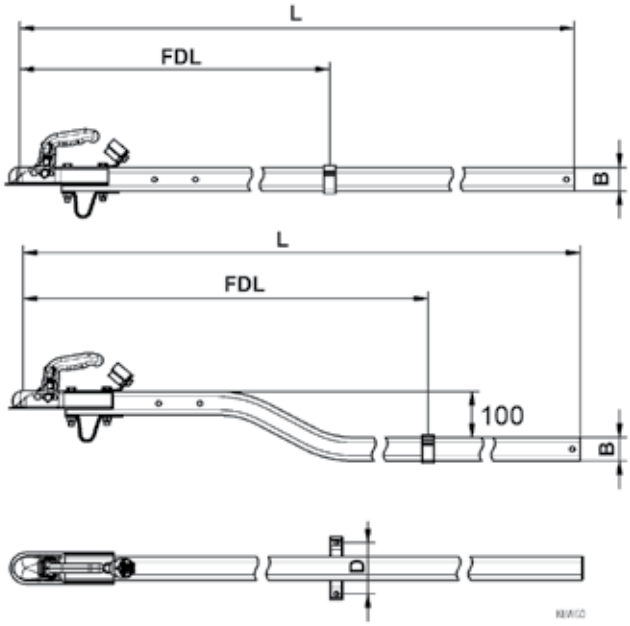

KDVV 7,5 Adjustable height drawbar

Type	Coupling	Adjustable Height H (mm)	d (mm)	Art. nr.
KDVV 7,5 A4	NATO45	375	80×80×3	6G0020.100
KDVV 7,5 A4	DIN45	375	80×80×3	6G0020.110
KDVV 7,5 A4	KK14BN3	375	80×80×3	6G0020.120
KDVV 7,5 A8	NATO45	600	80×80×4	6G0021.100
KDVV 7,5 A8	DIN45	600	80×80×4	6G0021.110
KDVV 7,5 A8	KK14BN3	600	80×80×4	6G0021.120

- Vert. load: 100 kg
- GVWR: 750 kg
- ECE number: **55R-011271**

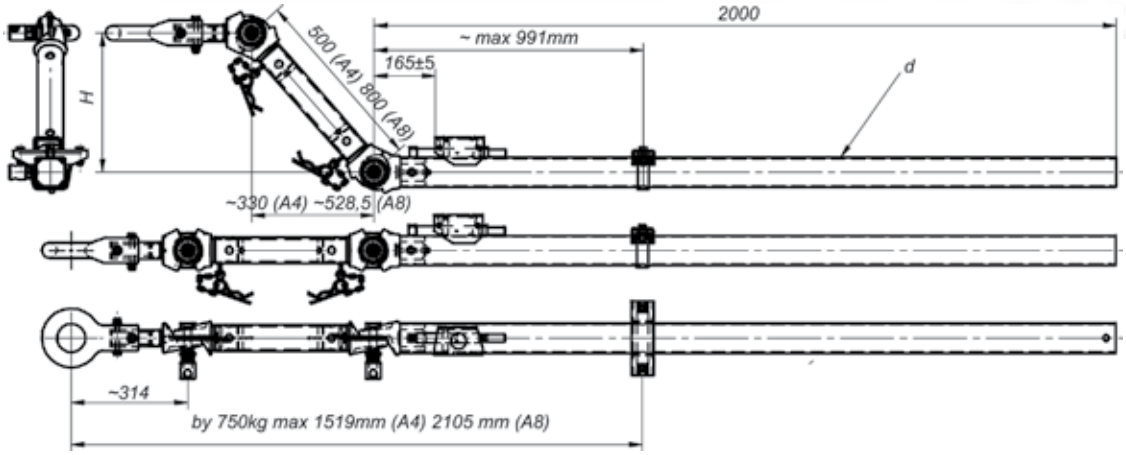

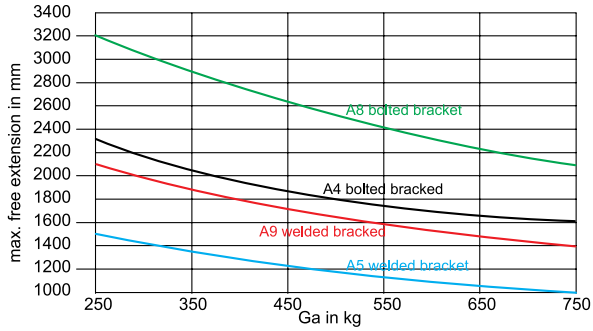

AHG 7,5 Adjustable height drawbar

Type	Coupling	Adjustable Height H (mm)	d (mm)	Art. nr.
AHG 7,5 A4	no	500	80×80×4	6G1352.001

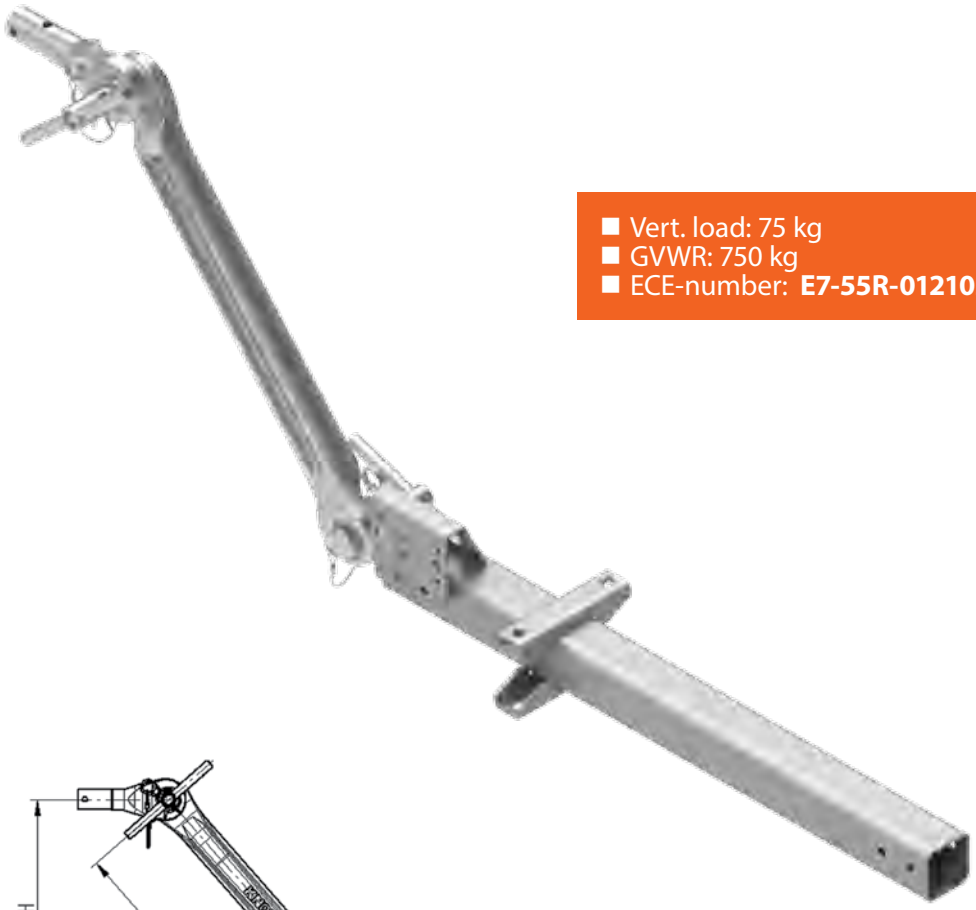

- Vert. load: 75 kg
- GVWR: 750 kg
- ECE-number: **E7-55R-012102**

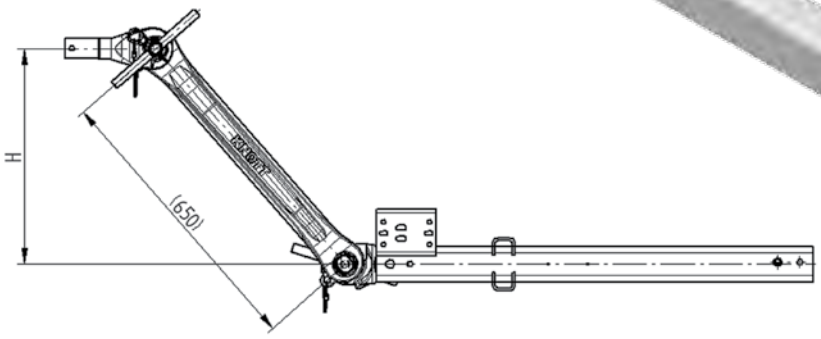

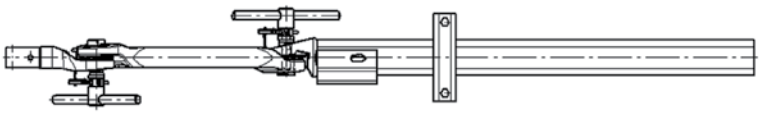

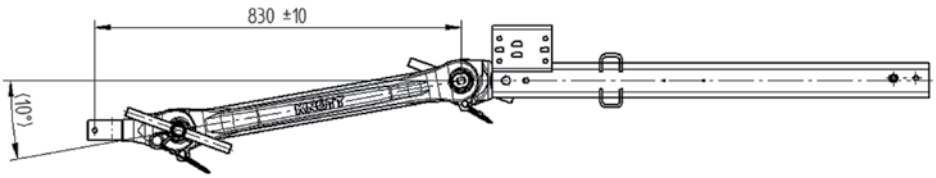

OVERRUN DEVICE

OVERRUN DEVICE

Spare parts for overrun coupling (KF 13-27)

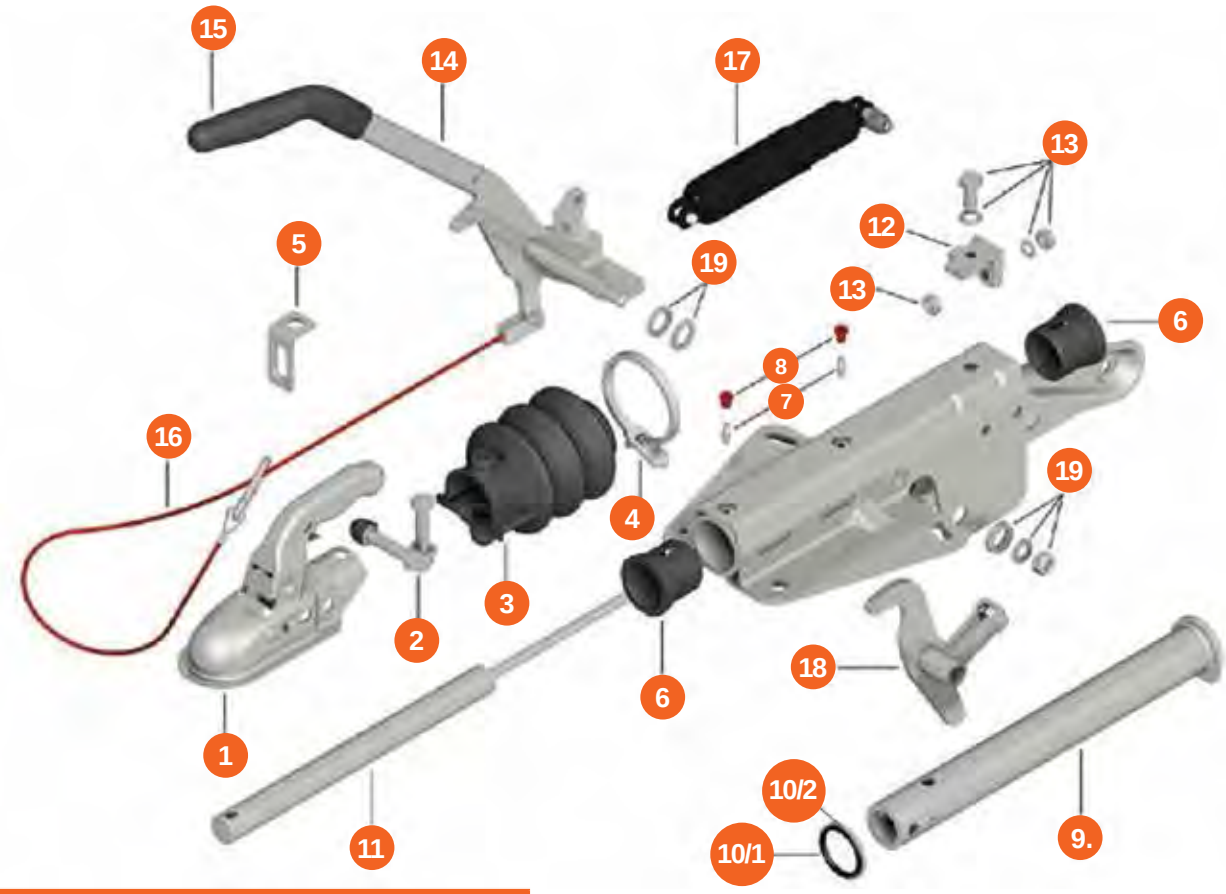

№	Description
1	Coupling head
2	Hexagon head bolt
3	Rubber bellows KF13 - KF27
4	Tie wrap
5	Bracket for breakaway cable
6	Guide bearing
7	Greasing nipple
8	Greasing nipple cap
9	Drawtube
10/1	Rubber stop ring
10/2	Support ring
11	Gas-filled shock absorber
12	Shock absorber bracket KF13 - KF27
13	Hexagon head bolt kit
14	Hand-brake assembly
15	Handgrip
16	Breakaway cable (complete) l=1200
17	Handbrake energy store
18	Transmission lever, complete
19	Washer
20	Hexagon head bolt kit

KF 7,5 - 20 Overrun "A" frame coupling

Type	Coupling head	Vertical load 'S' (max. kg)	GVWR (kg)	A (mm)	B (mm)	D (mm)	E (mm)	F (mm)	ECE number	Art. nr.
KF 7,5 C	KK14BN3	75	750	649	313	200	110	990	55R-012073	6J1356.102
KF 13 C	KK14BN3	100	1300	649	313	200	110	990	55R-012073	6J1060.102
KF 20 A	K20BN3	100	2000	649	313	200	110	990	55R-012073	6J1191.107

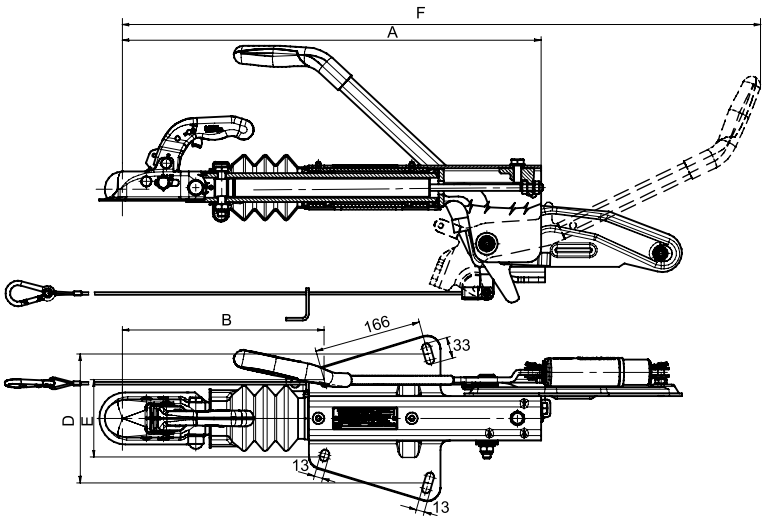

KF 27 - 30 Overrun "A" frame coupling

Type	Coupling head	Vertical load (max. kg)	GVWR (kg)	A (mm)	B (mm)	D (mm)	E (mm)	F (mm)	ECE number	Art. nr.
KF 27 A1	K27AN3	150	2700	676	302	200	110/120	925	55R-012063	6J2200.004
KF 30 C	K35AN3	150	3000	682	313	200	110/120	946	55R-012066	205244.001

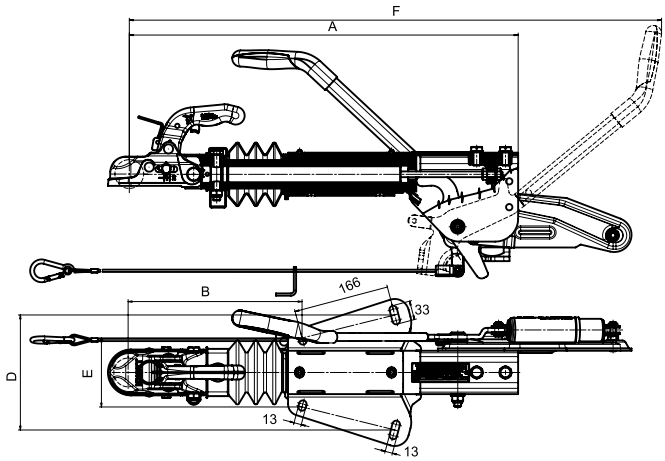

■ The overrun device can be ordered either with DIN or with NATO eye

KFL 12 - 14 Overrun "A" frame coupling

№	Type	Coupling head	Vertical load 'S' (max. kg)	GVWR (kg)	A (mm)	B (mm)	C (mm)	D (mm)	E (mm)	F (mm)	ECE number	Art. nr.
1	KFL 12 C	KK14BN3	100	450-750	588	288	130	158	100/110	804	55R-011590	204005.001
1	KFL 12 A	KK14BN3	100	750-1300	588	288	130	158	100/110	858	55R-011590	203595.001
2	KFL 14 A	KK14BN3	100	750-1400	588	288	166	200	100/120	810	55R-011590	205521.001
3	KFL 14 A	KK14BN3	100	750-1400	588	288	166	200	100/120	810	55R-011590	205800.001

KFL 12

KFL 14

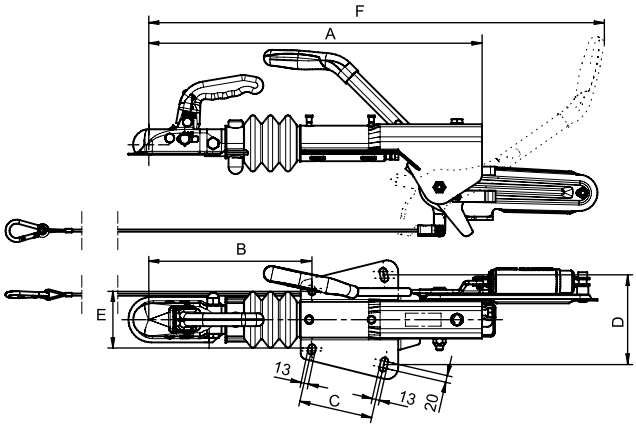

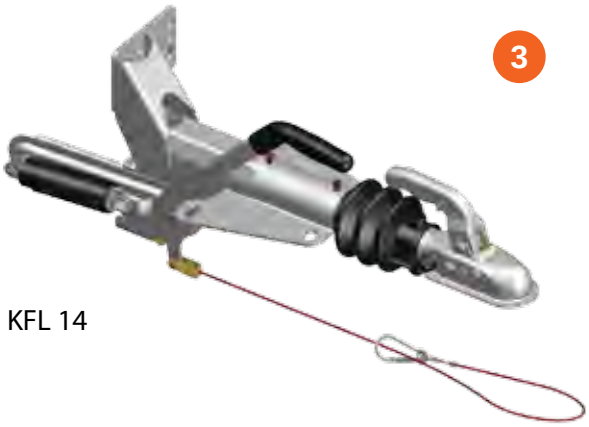

KFL 14

- With bracket for jockey wheel

- Coupling head: KK14BN3
- Vert. load: 100 kg
- ECE number: 55R-011590
- Model: GF

- The overrun device can be ordered either with DIN or with NATO eye

KFL 20 - 27 GFV Overrun "A" frame coupling

Type	Coupling head	Vertical load (max. kg)	GVWR (kg)	A (mm)	B (mm)	D (mm)	E (mm)	F (mm)	ECE number	Art. nr.
KFL 20 A	K24N3	100	2000	670	296	200	110/120	764	55R-011950	205179.001
KFL 20 B	K24N3	100	2400	670	296	200	110/120	824	55R-011950	206174.001
KFL 27 A	K27AN3	150	2700	669	299	200	110/120	833	55R-012116	206606.001

KFL 20

KFL 27

■ With bracket for jockey wheel

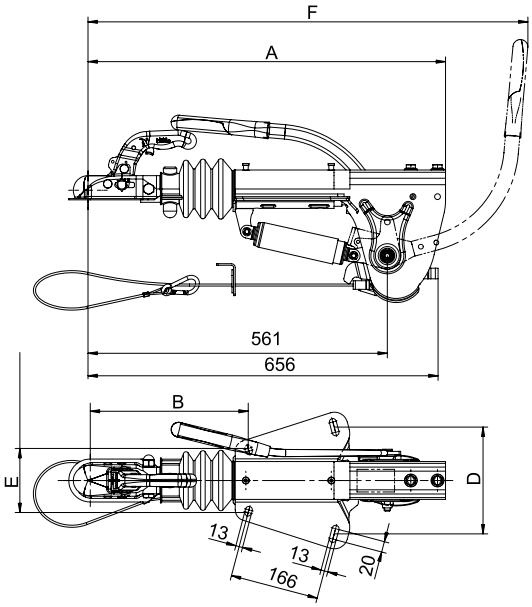

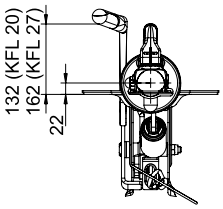

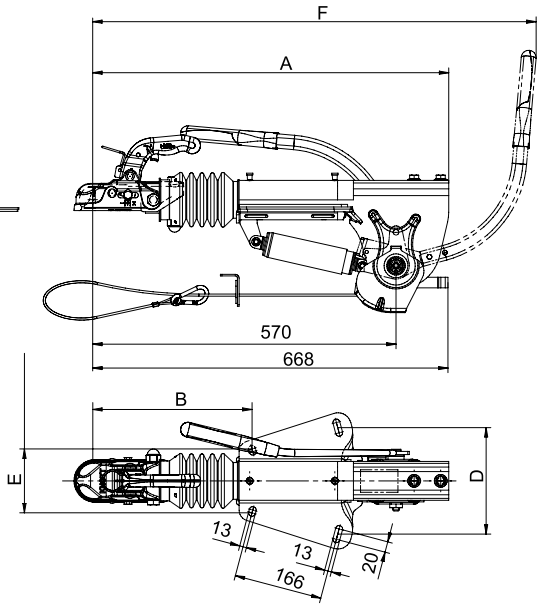

■ The overrun device can be ordered either with DIN or with NATO eye

KFG 30 - 35 GF Overrun "A" frame coupling

Type	Coupling head	Vertical load 'S' (max. kg)*	GVWR (kg)	A (mm)	B (mm)	D1 (mm)	D2 (mm)	E (mm)	F (mm)	ECE number	Art. nr.
KFG 30 A	K35AN3	300	3000	673	300	181	239	120	988	55R-010646	6J1493.004
KFG 35 D	K35CN3	350	3500	738	326	203	220	120/140	1052	55R-010647	6J1599.402
KFG 35 D	DIN eye	350	3500	738	326	203	220	120/140	1052	55R-010647	6J1599.404
KFG 35 D	NATO eye	350	3500	738	326	203	220	120/140	1052	55R-010647	6J1599.405

** Vertical load can vary depending on coupling head/towing eye.*

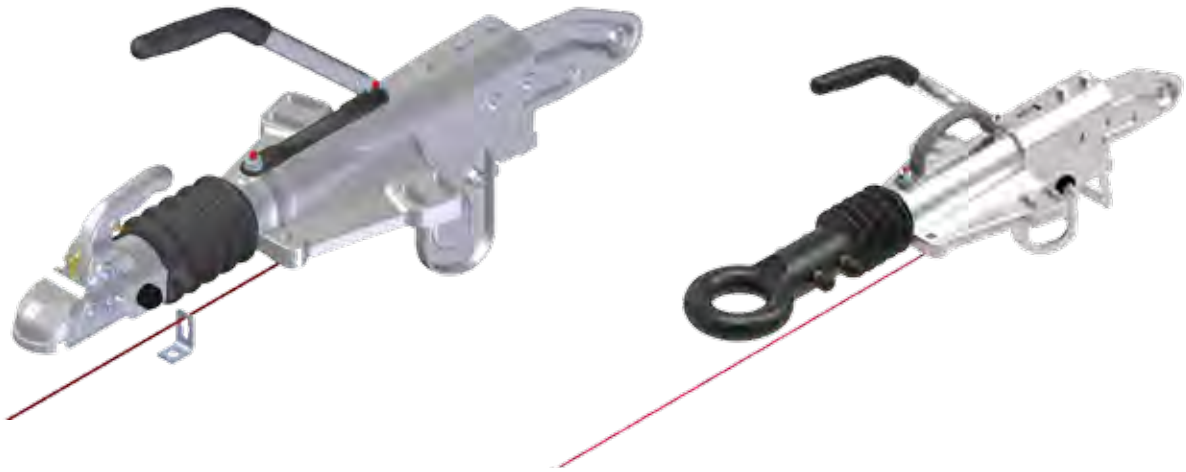

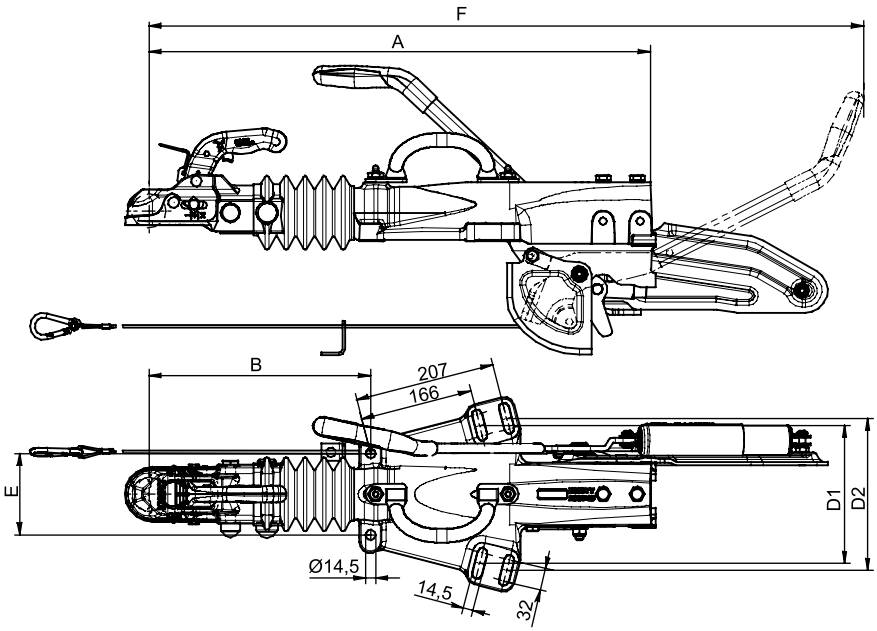

■ The overrun device can be ordered either with DIN or with NATO eye

KFGL 35 Overrun "A" frame coupling

Type	Coupling head	Vertical load 'S' (max. kg)*	GVWR (kg)	A (mm)	B (mm)	D1 (mm)	D2 (mm)	E (mm)	F (mm)	ECE number	Art. nr.
KFGL 35 A GF	K35CN3	350	3500	774	324	206	225	120/140	**1056**	**55R-011730**	204530.001
KFGL 35 A GF	K35CN3	350	3500	774	324	206	225	120/140	**1056**	**55R-011730**	204532.001

** Vertical load can vary depending on coupling head/towing eye.*

- With bracket for jockey wheel

- Coupling head: K35CN3
- Vert. load: 350 kg
- GVWR: 3500 kg
- ECE number: 55R-011730

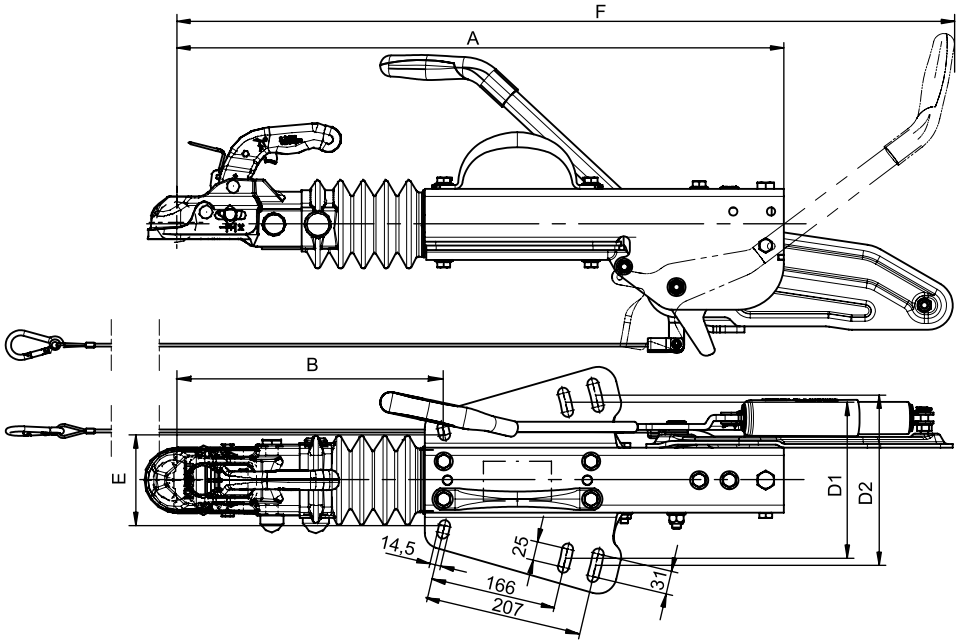

- The overrun device can be ordered either with DIN or with NATO eye

AHR-18 Overrun "A" frame hydraulic coupling

Type	Coupling head	Vertical load 'S' (max. kg)*	GVWR (kg)	A (mm)	B (mm)	D1 (mm)	D2 (mm)	E (mm)	F (mm)	ECE number	Art. nr.
AHR-18	K27BN3	150	1800	848	339	206	225	120/140	1325	55R-011217	6J2732.001

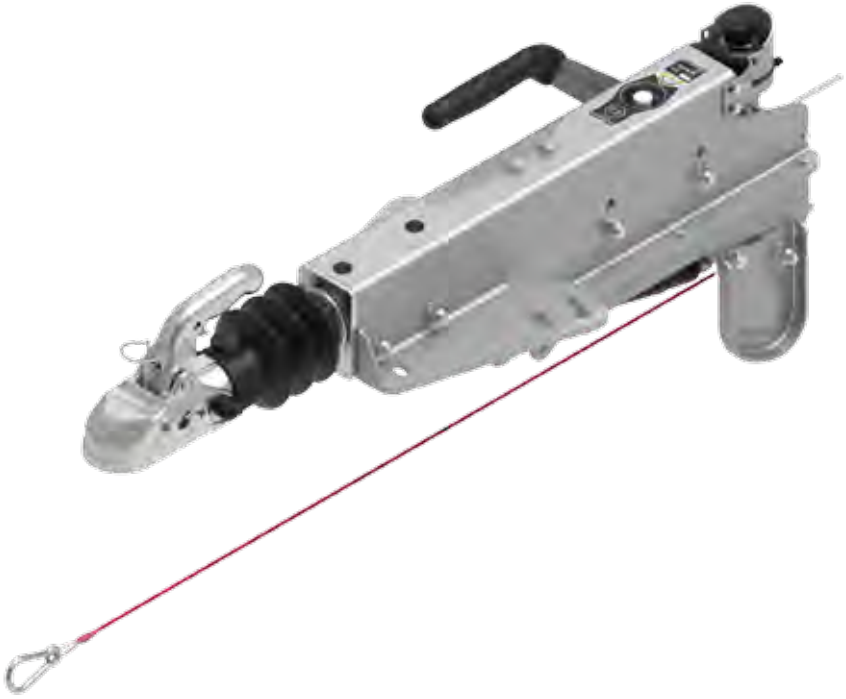

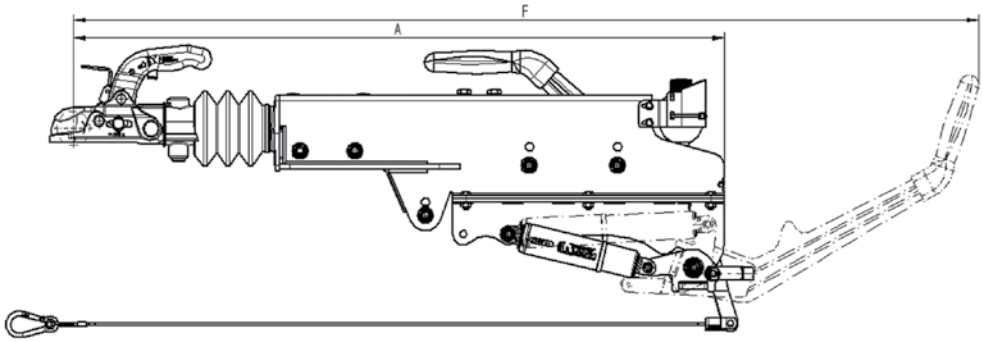

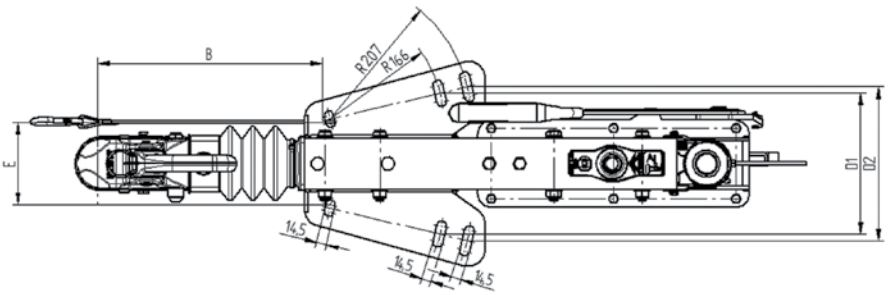

KV 13-18 Overrun in-line coupling - square tube

Type	Model	Coupling head	Vertical load (max. kg)	X (mm)	Y (mm)	D (mm)	ECE-number	Art. nr.
KV 13 C2	GF	KK14BN3	100	2520	1130	70×70×4	55R-010766	6J2439.001
KV 18 C	GF	K20BN3	100	2600	1130	70×70×5	55R-010553	6J2442.001

Type	FDL at GA	GVWR (kg)
KV 13 C2	1400 kg/ 1235 mm	1300
KV 18 C	2000 kg/ 1044 mm	2000

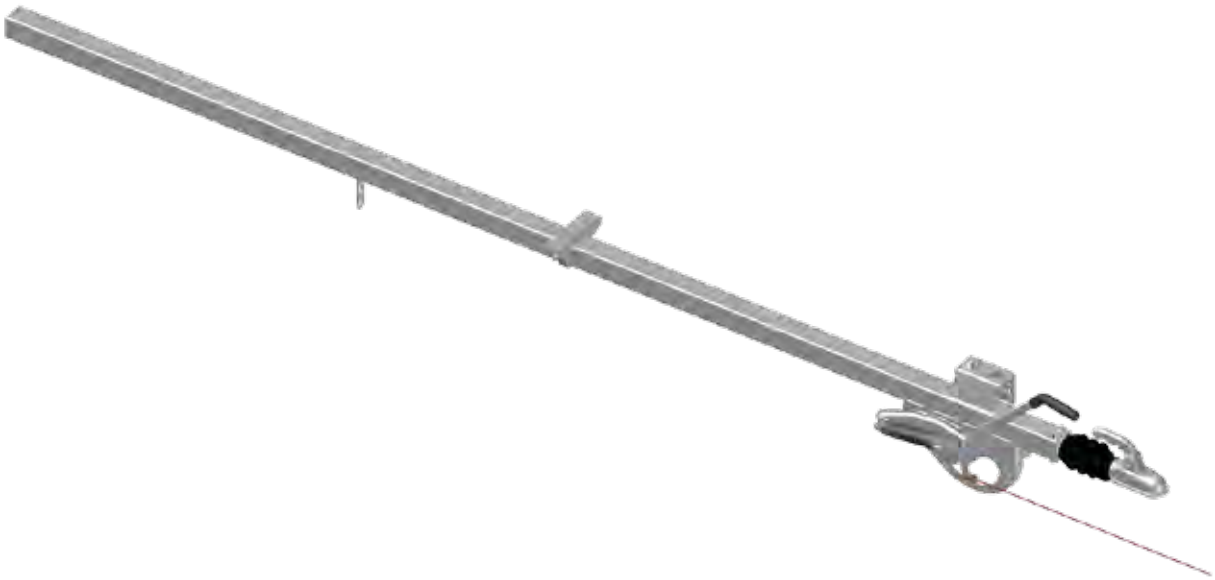

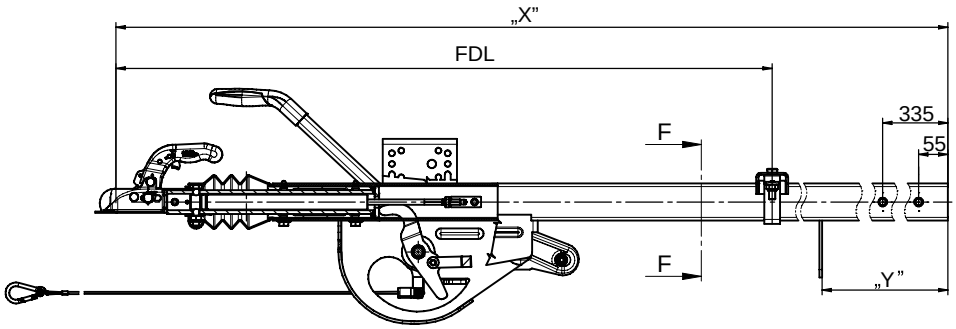

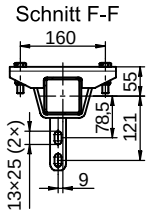

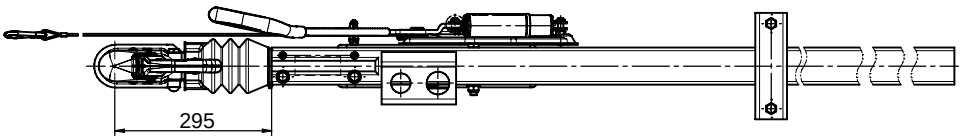

- Length "X" can be specified according to the requirements
- The overrun device can be ordered either with DIN or with NATO eye

KRV7,5 - 35 Overrun in-line coupling - square tube

Type	Coupling head	Vertical load 'S' (max. kg)	GVWR (kg)	A (mm)	B (mm)	D (mm)	F (mm)	X (mm)	ECE number	Art. nr.
KRV 13 C GF	KK14BN3	75	750	819	861	13	972	70	55R-011010	6J3061.001
KRV 13 C GF	KK14BN3	100	1300	819	861	13	972	60	55R-011010	6J3061.061
KRV 17 C GF	K20BN3	100	1700	819	861	13	972	70	55R-011010	6J3065.001
KRV 20 A GF	K20BN3	100	2000	836	873	16,5	984	100	55R-011018	209264.001
KRV 30 B GF	K35AN3	150	3000	853	842	16,5	913	100	55R-011052	203579.001
KRV 35 A GF	K35CN3	350	3500	988	1010	16,5	1037	120	55R-011588	203995.001

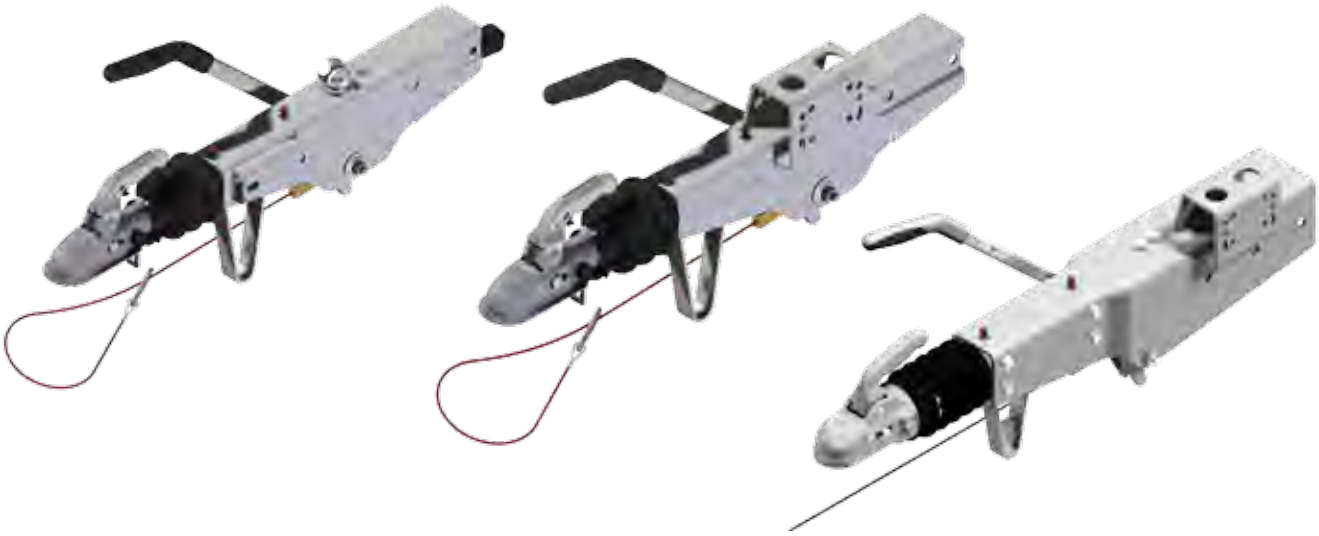

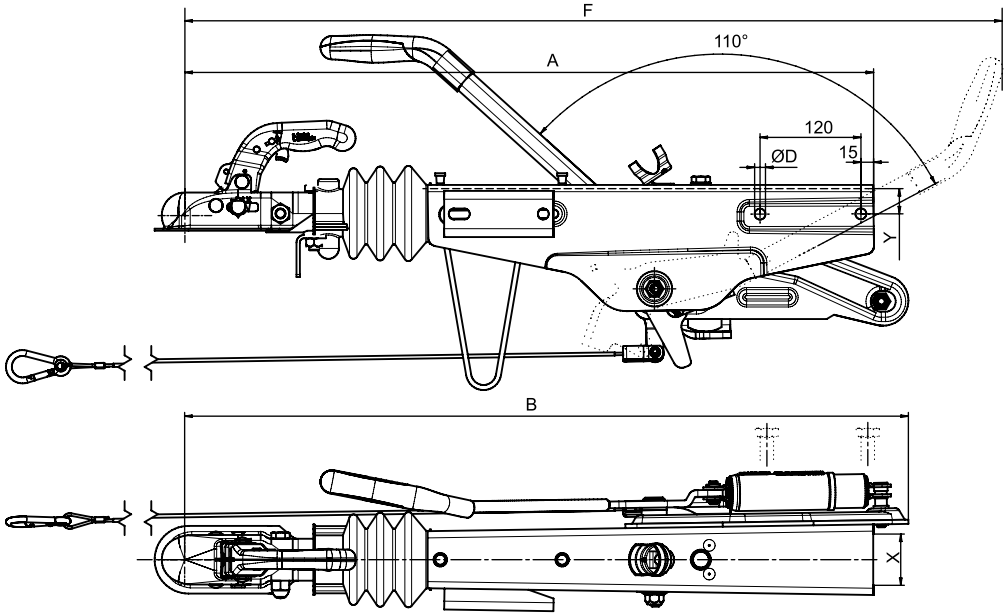

■ The overrun device can be ordered either with DIN or with NATO eye

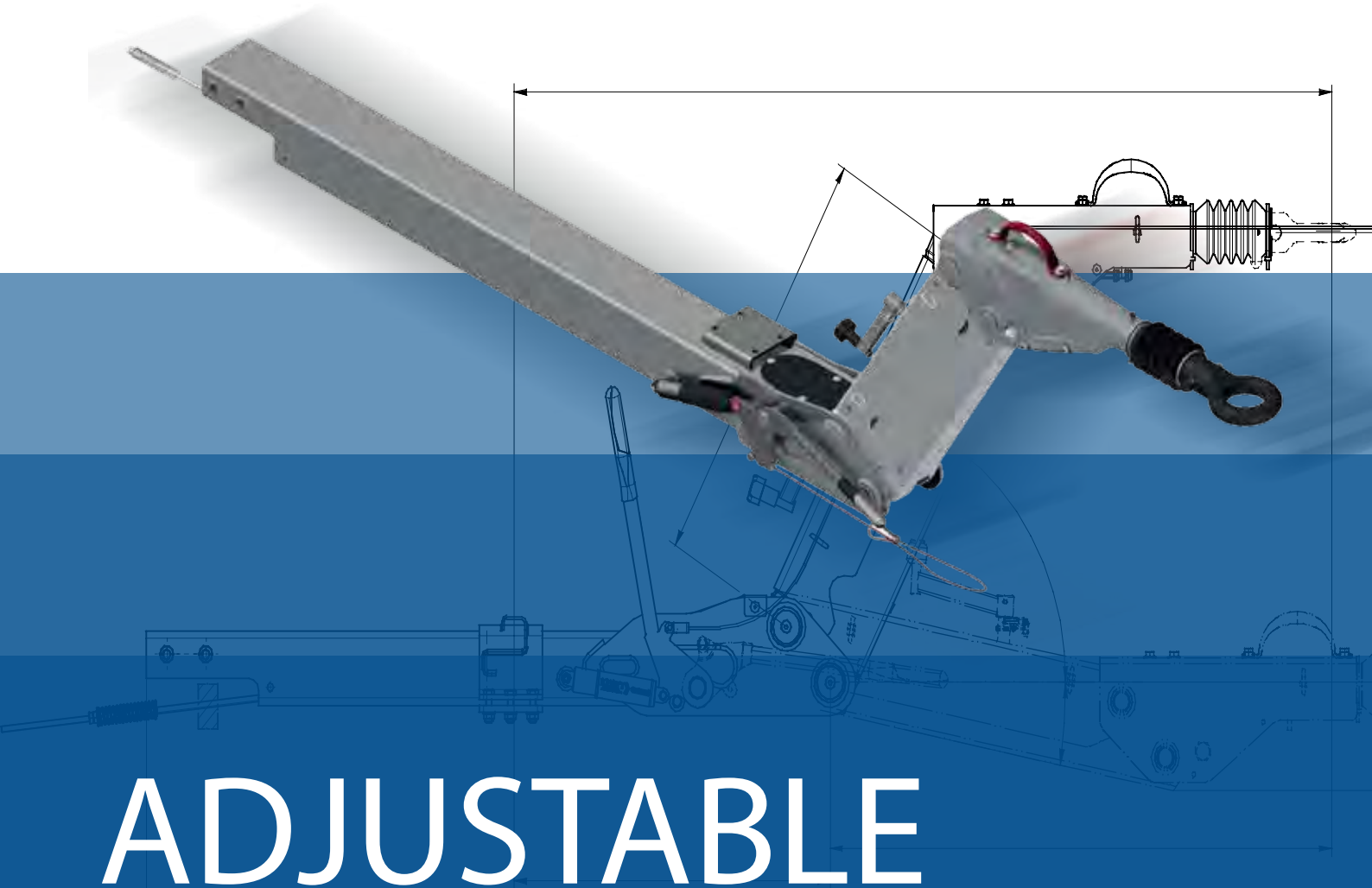

ADJUSTABLE HEIGHT COUPLING

KHD

Type	Vertical load 'S' (max. kg)*	GVWR (kg)	A (mm)	B (mm)	D (mm)	E (mm)	H (mm)	FDL (G_A max. kg)	ECE number	Art. nr.
KHD9	100	500-900	500	80x120x4	160	609	520	2500	55R-012090	708500.060
KHD15	100	800-1600	700	90x90x6,3	160	641	704	2075	55R-011623	707960.006
KHD20	150	1600-2000	700	120x120x4	180	641	732	2138	55R-012781	709600.006
KHD25	150	1600-2500	700	120x120x6	180	683	725	2583	55R-011690	709383G168
KHD25	150	1600-2500	700	120x120x6	180	683	725	2583	55R-011690	709383G169
KHD27	150	1600-2700	700	150x150x5	210	672	733	3550	55R-011549	706140.060
KHD27	150	1600-2700	700	150x150x5	210	672	733	3550	55R-011549	706140.132
KHD35	350	2500-3500	700	150x150x5	210	701	727	2511	55R-011548	706914.331
KHD35	350	2500-3500	700	150x150x5	210	701	727	2511	55R-011548	706914.367

** Vertical load can vary depending on coupling head/towing eye.*

- Vert. load KHD9-15: 100kg
  KHD20-27: 150 kg
  KHD35: 350 kg
- A (mm) KHD9: 500
  KHD15-35: 700
- L: 2000 mm

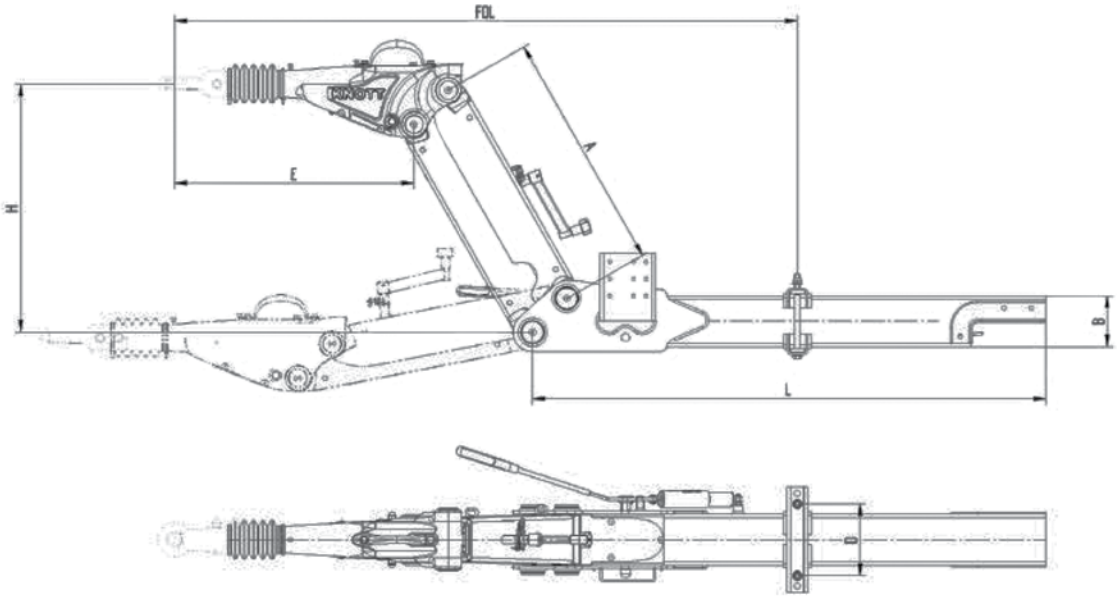

AHV

Type	H1 (mm)	H2(mm)	S (mm) max.	V (mm)	L1 (mm) max.	ECE number	B (mm)
AHV16 LS	535	75	2182	500	1150	55R-011472	90×90×6
AHV 20 S	535	73	2116	500	1125	55R-011472	100×100×8
AHV 25 LS	485	117	2316	400	1400	55R-011472	100×100×8
AHV 35 S	485	117	1840	400	925	55R-011472	90×160×6

AHV 16 LS

Towing element	ECE number	Art. nr.
K20BN3	55R-011472	6G5375S120
DIN45	55R-011472	6G5375S110
NATO45	55R-011472	6G5375S101

- Vert. load: 100 kg
- Load capacity: 1100 - 1600 kg
- ECE number: **55R-011472**
- Drawing number: AHV0375S

AHV 20 S

Towing element	ECE number	Art. nr.
K27BN3	55R-011473	6G5200S120
DIN45	55R-011473	6G5200S110
NATO45	55R-011473	6G5200S101

- Vert. load: 100 kg
- Load capacity: 1100 - 2000 kg
- ECE number: **55R-011473**
- Drawing number: AHV0200S

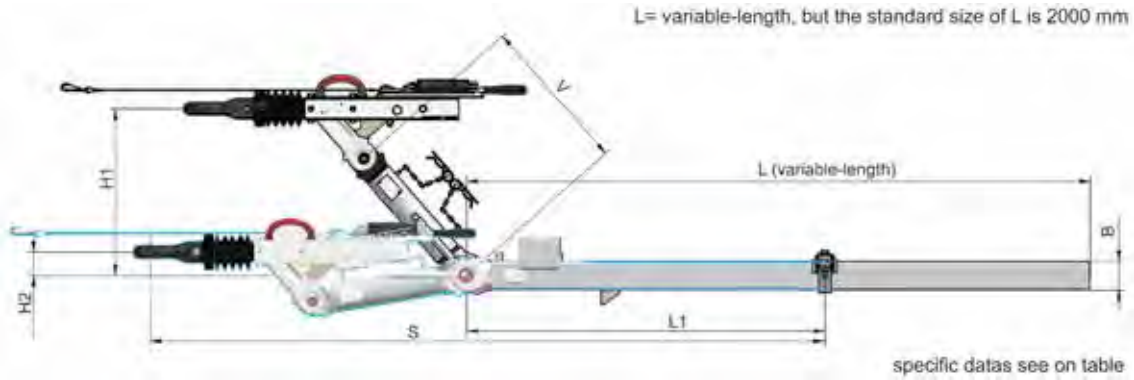

AHV 25 LS

Towing element	Art. nr.
K35CN3	6G5372S120
DIN60	6G5372S110
NATO60	6G5372S101

- Vert. load: 150 kg
- Load capacity: 2000-2500 kg
- ECE number: **55R-011474**
- Drawing number: AHV0372S

AHV 35 S

Towing element	Middle part	Art. nr.
K35CN3	400	6G5027S120
DIN60	400	6G5027S110
NATO60	600	6G5027S101

- Vert. load: 150 kg
- Load capacity: 2700-3500 kg
- ECE number: **55R-011475**
- Drawing number: AHV0027S

AHG 8,5

Type	Coupling	Adjustabe Height H (mm)	d (mm)	Art. nr.
AHG 8,5 A6	no	500	80×80×5	6G1350.001

- Vert. load: 85 kg
- GVWR: 850 kg
- ECE number: **E7-55R-012103**

Support plates

- The support plate are made of the highest quality polypropylene with the addition of glass fiber. This material is resistant to chemicals and UV rays, thanks to which its service life is relatively long.
- Support plates are offered as a set - 423344.001
- Made of high-quality materials translates into high compressive strength, thanks to which they easily withstand the permissible pressure of the folding supports - 900 kg.
- The support plates are equipped with locking pins made of corrosionresistant metal. Locking after mounting on the support is done with a spring pin, thanks to which it is very simple and does not require specialized tools.
- This solution also allows for driving with a trailer without removing the support plates, which is very important from the user's point of view.

- Support with mounted washer.
- Increased service life and durability of supports.
- Greater aesthetics.

KNOTT AUTÓFLEX-GROUP

UNBRAKED AXLES

Variety of swing arms

Rolled steel swing arm with square tube axle stub

Axle load max.
500 kg

Bended steel swing arm with square tube axle stub

Axle load max.
750 kg

Pressed steel swing arm with square tube axle stub

Axle load max.
1800 kg

Pressed steel swing arm with square bar axle stub

Axle load max.
1800 kg

Forged steel swing arm with square bar axle stub

Axle load max.
2500 kg

Forged steel swing arm with square bar axle stub

Axle load max.
2500 kg

Variety of mounting bracket styles

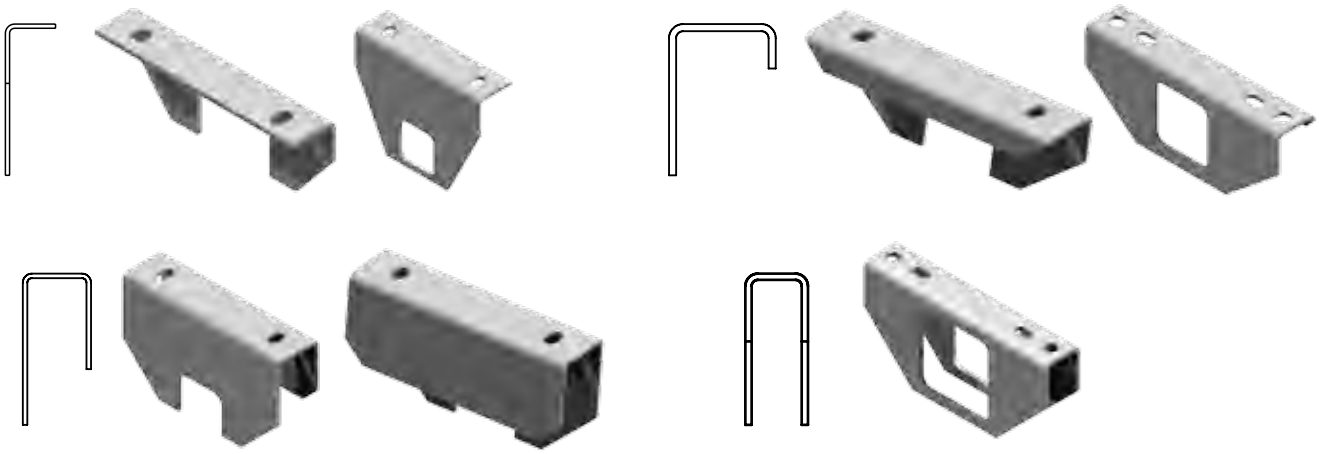

- These brackets are just a part of our complete range.

Long mounting brackets

For tandem axle trailers

For boat trailers

- Material: steel plate
- Surface treatment: hot dip galvanization
- Use: mounting the axle to the chassis
- Mounting possibility to chassis with bolt

For more types please contact our sales personnel!

HUBS

Hubs

All of our wheel hubs are also available in water resistant version.

- Surface treatment: e-coating
- Bearing: compact roller bearing or tapered roller bearing

The advantages of compact roller bearings over taper roller bearings and ball bearings:

- These bearings can accommodate axial loads in both directions, as well as radial loads
- Available in stainless & waterproof version, or in waterproof version only
- Sealed unit which is highly dirt resistant
- Maintenance free

Equipped with sealed - for life - bearing to ensure extended usage time.

Oil lubricated hub

Advantages:
- water resistant
- transparent dustcap
- easy to refill

Spare parts for non braked rubber suspension axles

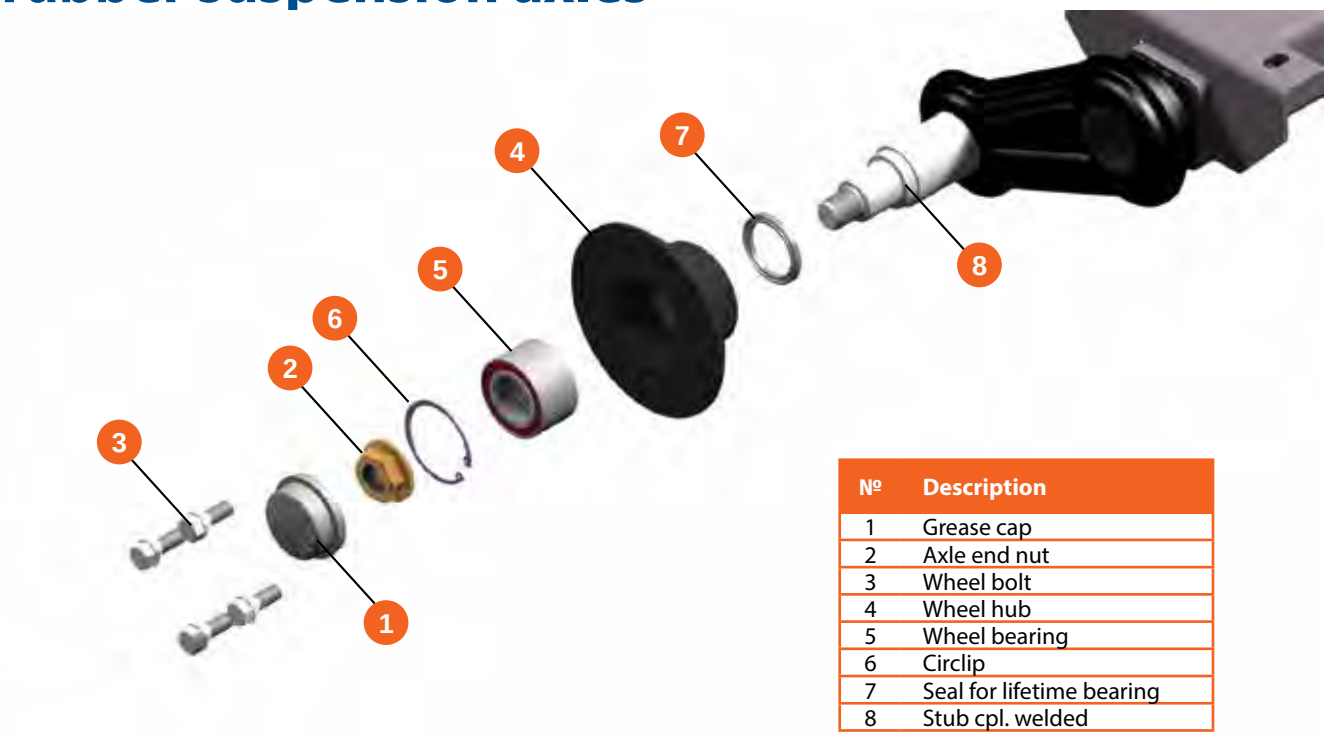

№	Description
1	Grease cap
2	Axle end nut
3	Wheel bolt
4	Wheel hub
5	Wheel bearing
6	Circlip
7	Seal for lifetime bearing
8	Stub cpl. welded

Variety of unbraked wheel hubs

Type	Offset (mm)	Drawing number
FNK22	0 - 45	6A7741
FNK23	0 - 45	6A7861

■ Axle load capacity up to 750 kg

Wheel connection	Hub
98×4	FNK22, FNK12
100×4	FNK22, FNK12
100×5	FNK12
108×4	FNK22, FNK12
110×4	FNK12, FNK6
110×5	FNK12, FNK6
112×5	FNK12, FNK6
112×3	FNK12, FNK6
114,3×5	FNK12, FNK6
115×4	FNK12, FNK6
120×5	FNK12, FNK6
120×6	FNK12, FNK6
130×4	FNK23, FNK13, FNK8
130×5	FNK13, FNK8
130×6	FNK13, FNK8
139,7×4	FNK14, FNK8
139,7×5	FNK14, FNK8
139,7×6	FNK14, FNK8
140×5	FNK14, FNK8
140×6	FNK14, FNK8
150×3	FNK14, FNK8
150×5	FNK14, FNK8
152,4×5	FNK14, FNK8
160×5	FNK14, FNK8
165,1×5	FNK14, FNK8
170×5	FNK14, FNK8

FNK23

FNK22

■ All wheel hubs are available in water-resistant version too.

Variety of unbraked wheel hubs

Type	Offset (mm)	Drawing number
FNK12	25 - 35	6B1302
FNK13	25 - 35	6B1303
FNK14	25 - 35	6B1383

FNK12

FNK13

FNK14

■ Axle load capacity up to 1350 kg

Type	Offset	Drawing number
FNK6	up to 1500 kg 0-35 over 1500 kg 25-35	6B0724
FNK6W	up to 1500 kg 0-35 over 1500 kg 25-35	6B0724
FNK8	up to 1500 kg 0-35 over 1500 kg 25-35	6B0800
FNK8W	up to 1500 kg 0-35 over 1500 kg 25-35	6B0800

FNK6

FNK8

■ Axle load capacity up to 1800 kg

VG Unbraked rubber suspension axle

Type	Load capacity (kg)	c (mm)	b (mm)	PCD (mm)	Offset (mm)	Art. nr.
VG7-L	750	1450	1000	Ø100×4	0-45	6A8712.001
VG8-10-M	1050	1450	1000	Ø100×4	0-45	6AA013.001
VG10-13-M	1350	1450	1000	Ø100×4	26-35	6AA028.001
VG14-18-MV	1850	1450	1000	Ø112×5	26-35	6AA304.005

Product can be used for:
- jet skis
- snow-mobiles
- dog trailers
- utility trailers such as generators
- boats
- utility vehicles
- horse trailers

Standard surface treatment:
- hot-dip galvanization

Load capacity:
- up to 1350 kg

Bearing type:
- lifetime compact ball bearing
- taper roller bearing

The product package includes:
- rubber torsion axle and type plate
- hub
- swing arm

If you are interested in our product, please give the following parameters to our sales personnel to help you choose the best product suited to your needs:
- **H, c, b size**
- **load capacity**
- **wheel connection**
- **offset**

■ Axle load capacity up to 1350 kg

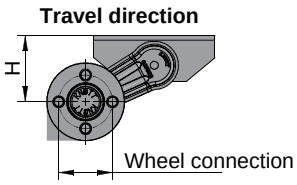

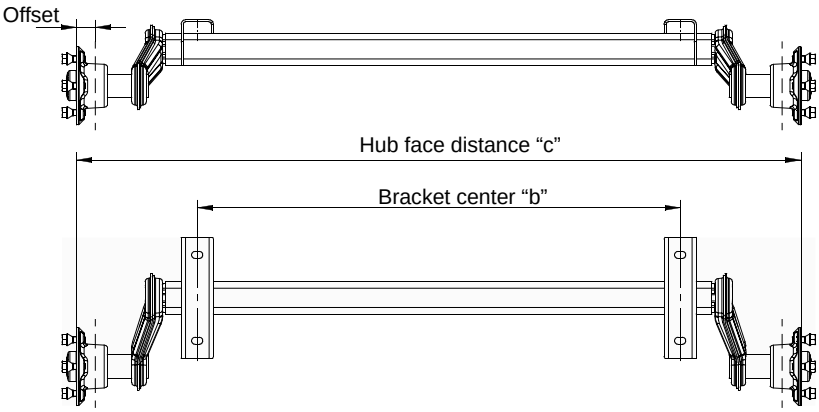

Unbraked rubber suspension bended axle

Coating Method	Symbol	Salt spray testing result (h)
Powder Coating	P	300 h
Galvanization	G	> 500 h
Galvanization & powder coating	G&P	700 h
E-coating	E	> 800 h
Hot dip galvanization	HG	> 1000 h
E-coating & powder coating	E&P	> 1000 h

Product can be used for:
- boat trailers

Standard surface treatment:
- hot-dip galvanization

Load capacity:
- 350 - 800 kg

Bearing type:
- lifetime compact ball bearing
- taper roller bearing

Advantages:
- The new design allows an easier transportation of boats and other vehicles
- The lower centre of gravity makes it more stable

If you are interested in our product, please give the following parameters to our sales personnel to help you choose the best type suited to your needs:
- **H, c, b size**
- **load capacity**
- **wheel connection**
- **offset**

■ Axle load capacity up to 800 kg

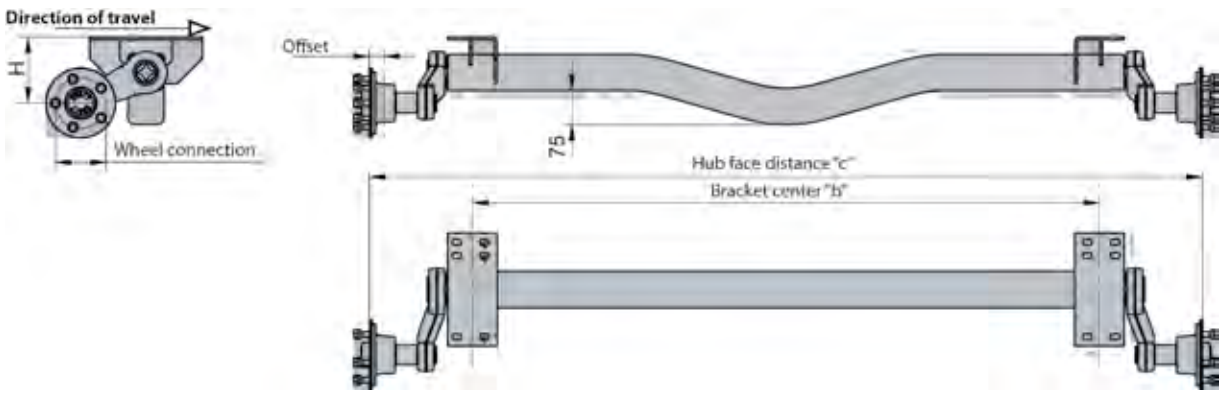

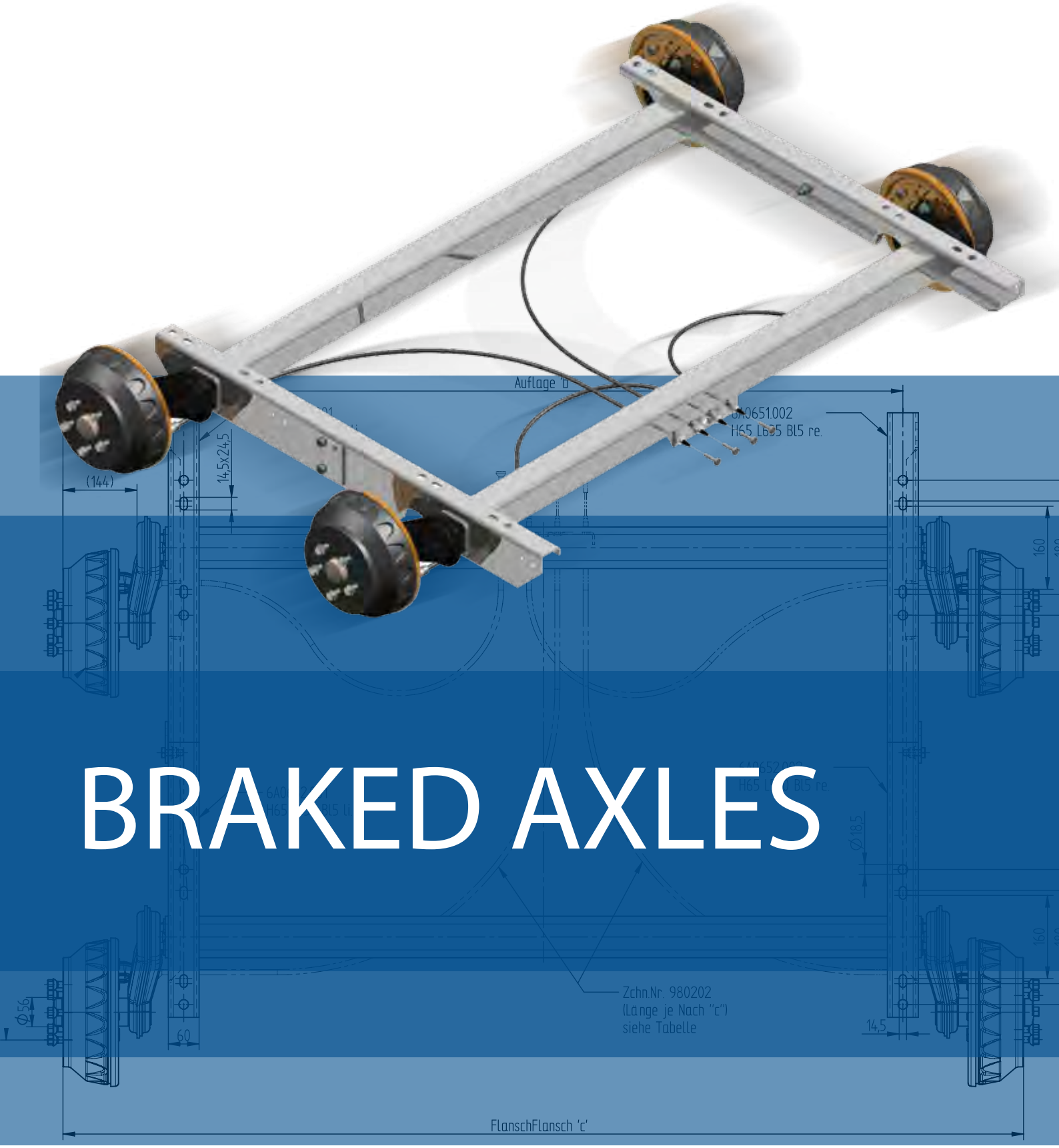

BRAKED AXLES

EUROPEAN QUALITY TRAILER AXLES

Rubber torsion axle

Suspension diagram

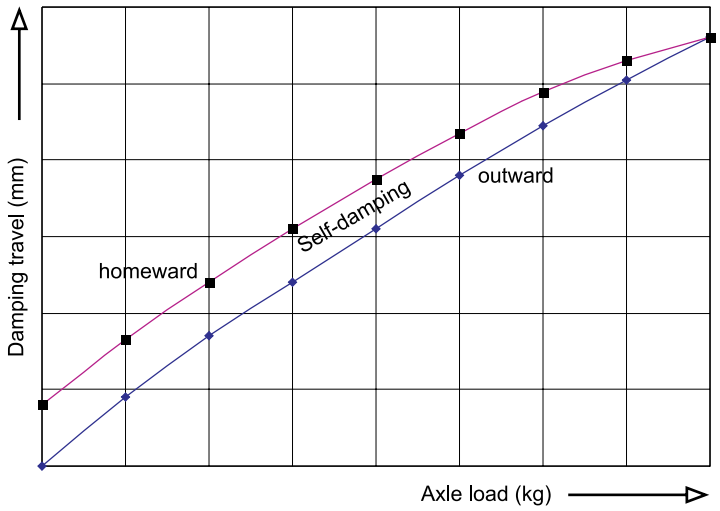

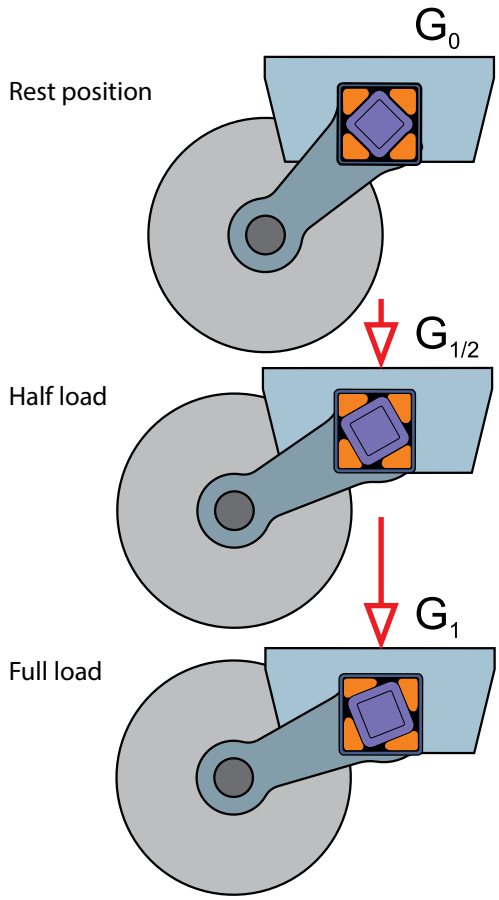

Advantages of the 4 piece rubber torsion axle:

- correct guideline
- stable underpinning
- inner self-damping
- precisely adjustable spring power

Suspension Systems comparison

Type:	4 piece Rubber Torsion Axle	Spiral Spring	Solid axle with Leaf Spring	Steel torsion axle	Rubber torsion axle
Advantages:	• easy mounting • correct guideline • stable underpinning • inner self-damping	maximum suspension comfort	• less temperature dependent • easy mounting • big load capacity	• less temperature dependent • easy mounting • big load capacity	• good suspension comfort • precise handling • maintenance free
Contains:	• square tube • inner tube • 4 rubber cords	spiral spring suspension	leaf spring	axle	axle
Axle type:	rubber torsion axle	no axle	rigid axle	steel torsion axle	rubber torsion axle
Shock absorber	possible, but not necessary	yes	yes	possible, but not necessary	possible, but not necessary
Usability	for all kinds of trailers	for sensible goods and animal transportation	in harsh environments	in harsh environments, even for sensible goods	for sensible and valuable goods and animal transportation

VGB Braked axle

Type	Load capacity (kg)	c (mm)	b (mm)	PCD (mm)	Offset (mm)	Art. nr.
VGB7-10-M	1050	1550	1100	Ø100×4	0-45	6A9627.015
VGB10-13-M	1350	1550	1100	Ø112×5	26-35	6A9627.018
VGB15-MV	1500	1470	1000	Ø112×5	0-45	6AA014.001
VGB18-MV	1850	1470	1000	Ø112×5	26-35	6AA255.001

VGB Braked axle with disc brake

Type	Load capacity (kg)	c (mm)	b (mm)	PCD (mm)	Offset (mm)	Art. nr.
VGB13-M	1350	2250	1800	Ø112×5	25-35	6AE363.001
VGB18-MV	1800	2070	1600	Ø112×5	25-35	6AE490.001
VGB37-MV	3700	2280	1770	Ø165,1x6	25-35	6AE723.001

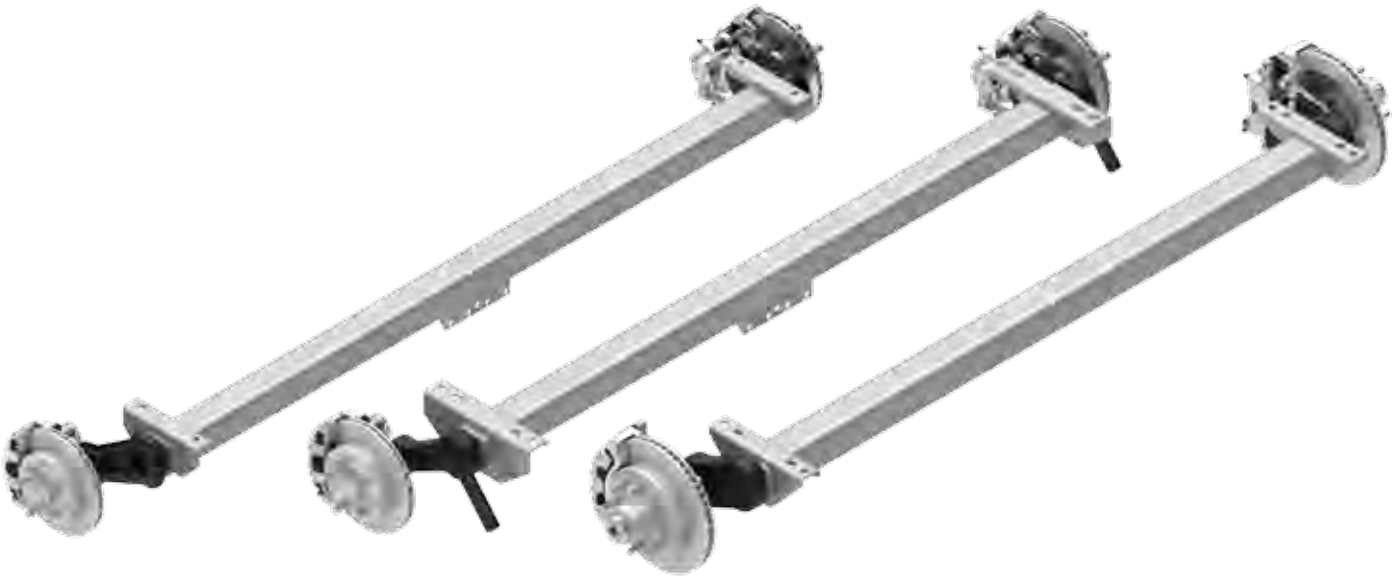

AXLE HUB CAP

Introducing our new type of Axle Hub Cap

A characteristic feature of our products is to adapt them to our customer's constantly changing needs, whilst we offer innovative solutions for their increased comfort and safety.

The caps are provided with a groove which allows the insertion of a wheel reflector improving visibility at night.

It also worth mentioning that the caps are:

- zinc plated and resistant to weather conditions
- an effective thread shield
- available in two sizes: Ø 52 mm and Ø 64 mm

Axle Hub Cap size	Art. nr.
Ø 52 mm	418661.001
Ø 64 mm	418660.001

■ For more details please contact KNOTT Sales Department.

KNOTT BRAKES

Each of our braked axles are fitted with high quality Knott brakes that have been market leaders for over 70 years.

The new generation of brakes include an "automatic adjustment" feature that will not need any maitenance.

Our brakes supply include:

- mechanical drum brakes
- hydraulic drum brakes
- hydraulic disc brakes (innovation)
- electric brakes

Brake System comparison

Types:	Mechanical Drum Brake	Hydraulic Drum Brake	Hydraulic Disc Brake	Electric Drum Brake
Advantages:	• serial product (lower price level) • automatic reversing • automatic adjustment is possible • compact • easy installation	• precise • long lifetime	• maintenance free • better braking quality • long lifetime • automatic adjustment	• simple construction • automatic reversing • rigid drawbar (lower price level)
Supplementary equipment	• overrun device • brake cables • balance	• hydraulic overrun device • hydraulic cables • brake cables • balance	• hydraulic overrun device • electronic reversing control • hydraulic cables • brake cables • balance	• coupling • brake cables • balance
Max. load capacity	900 kg	900 kg	900 kg	900 kg
Bearing	• lifetime compact ball bearing • taper roller bearing	compact bearing	• compact bearing or • taper roller bearing	taper roller bearing
Surface treatment	e-coated	e-coated	powder coated	e-coated
Water resistant	possible	possible	yes	possible
Status	serial product	serial product	new product	in development

■ When ordering, please indicate whether you would like to get your axle with a self-adjusting brake.

Variety of mechanical drum brakes

Type	Brake drum	Brake shoe width (mm)	Permissible mass G_{BO} (kg)	Brake Torque M max (Nm)	Tyre Ø (m) min.	Tyre Ø (m) max.	ECE number
16-1365	F160	35	500	1050	0.368	0.580	361-0035-97
20-2425/1	F200	50	750	1700	0.506	0.720	361-006-94
25-2025	F250	40	900	2000	0.506	0.720	361-007-94
30- 2261	F300	60	1500	6500	0.660	0.900	361-1076-97

Type	Offset (mm)	Drawing number
F160	0 - 45	6A0113
F160W	0 - 45	6A2263
F200	0 - 45	6A1121
F200W	0 - 45	6A2265
F200ET0	(-5) - 35	6A1303
F200ET0W	(-5) - 35	6A2578

W= water resistant / waterproof

F160

F200

F200ET0

Variety of mechanical drum brakes

Wheel connection	Brake
98×4	F160, F200
100×4	F160, F200
100×5	F200
108×4	F160, F200
110×4	F200
110×5	F200
112×5	F200, F250
114,3×5	F200, F250
115×4	F200, F250
120×5	F200, F250
120×6	F200, F250
130×4	F200, F250
130×5	F200, F250
130×6	F200, F250
139,7×4	F200, F250
139,7×5	F200, F250
139,7×6	F200, F250
140×5	F200, F250
140×6	F200, F250
150×5	F250
152,4×5	F250
160×5	F250
165,1×5	F250
205×6	F300
205×5	F300
205×5	F300

Type	Offset (mm)	Drawing nr.
F250	0 - 45	6A0428
F250W	0 - 45	6A2327
F250ET10	0 - 10	6B7714
F300	0 - 45	6A2548

W= water resistant / waterproof

F250

F250ET0

F300

Washing nozzle for waterproof drum brakes

For longer life time use the washing nozzle.

It cleans the drum from the inside, so the brake shoe and spring remain clean.

How to use:

Plug the hose to the nozzle and turn on the water. The salt water and dirt will flow out.

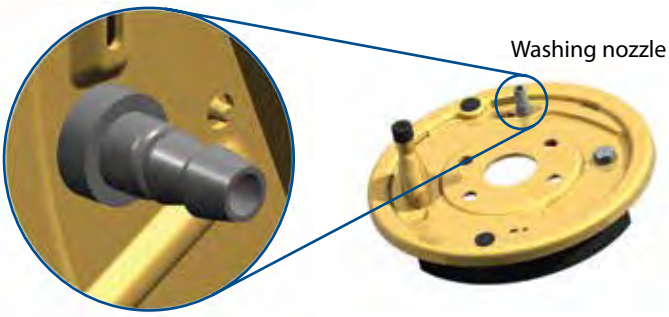

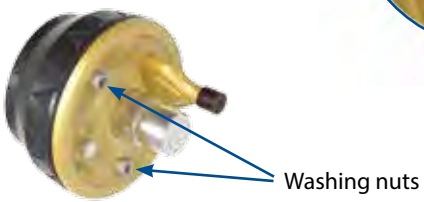

Spare parts for wheel brake F160x35

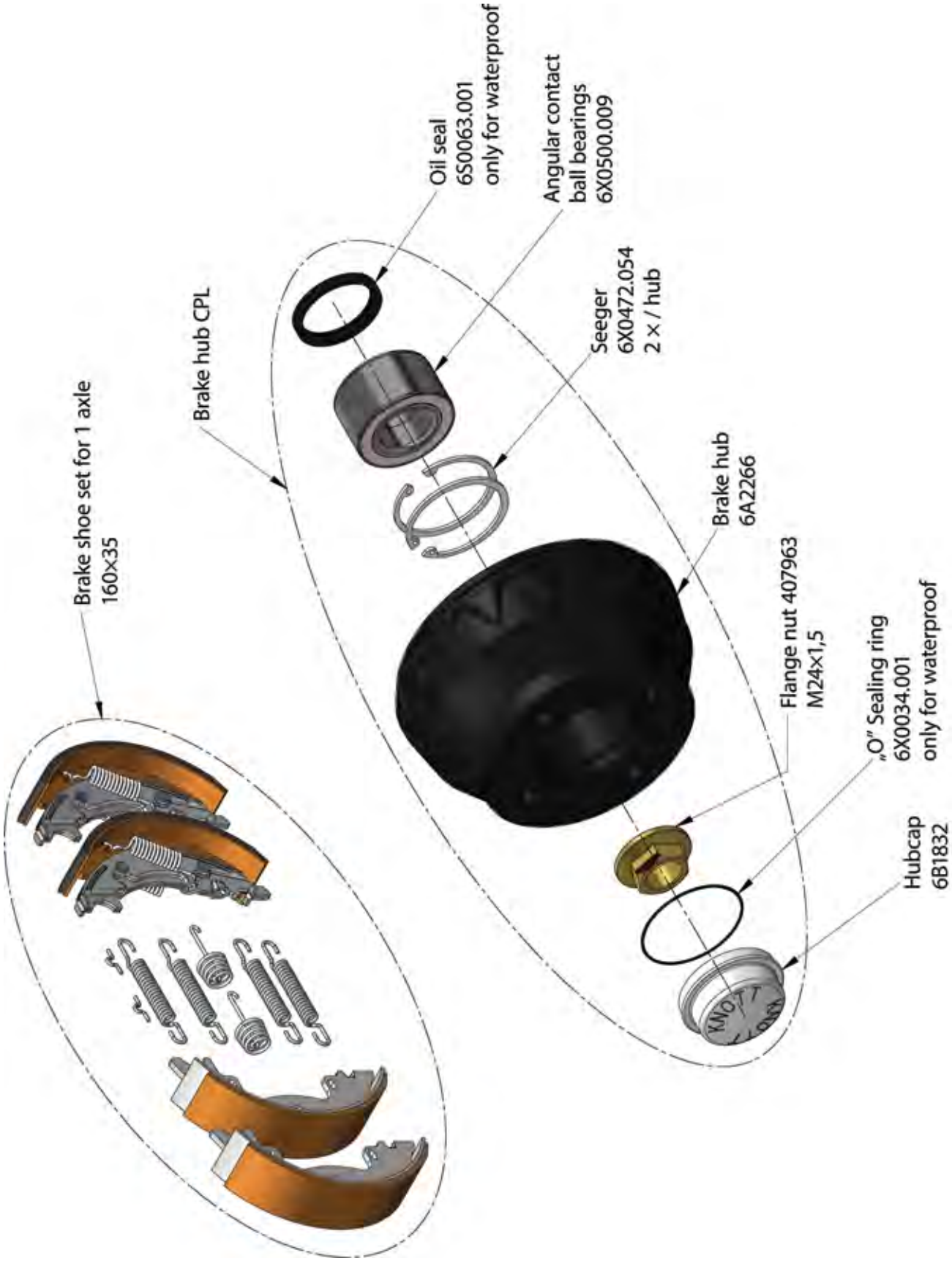

6BH892 - F160x35

Ref. nr.	Description	Brake hub set	Brake hub	Seeger 2x/hub	Angular contact ball bearings	Hub cap	Oil seal	„O" Sealing ring	Flange nut	Brake shoe set for 1 axle
6BH892.004	100 x 4 Waterproof	6A2267.039	6A2266.001	6X0472.054	6X0500.009	6B1832C017	6S0063.001	6X0034.001	6B0053.001	402611
6BH892.003	100 x 4	6A2266.017	6A2266.001	6X0472.054	6X0500.009	6B1832C002	-	-	6B0053.001	402611
6BH892.002	112 x 5 Waterproof	6A2267.028	6A2266.001	6X0472.054	6X0500.009	6B1832C017	6S0063.001	6X0034.001	6B0053.001	402611
6BH892.001	112 x 5	6A2267.025	6A2266.001	6X0472.054	6X0500.009	6B1832C002	-	-	6B0053.001	402611

Spare parts for wheel brake F200x50

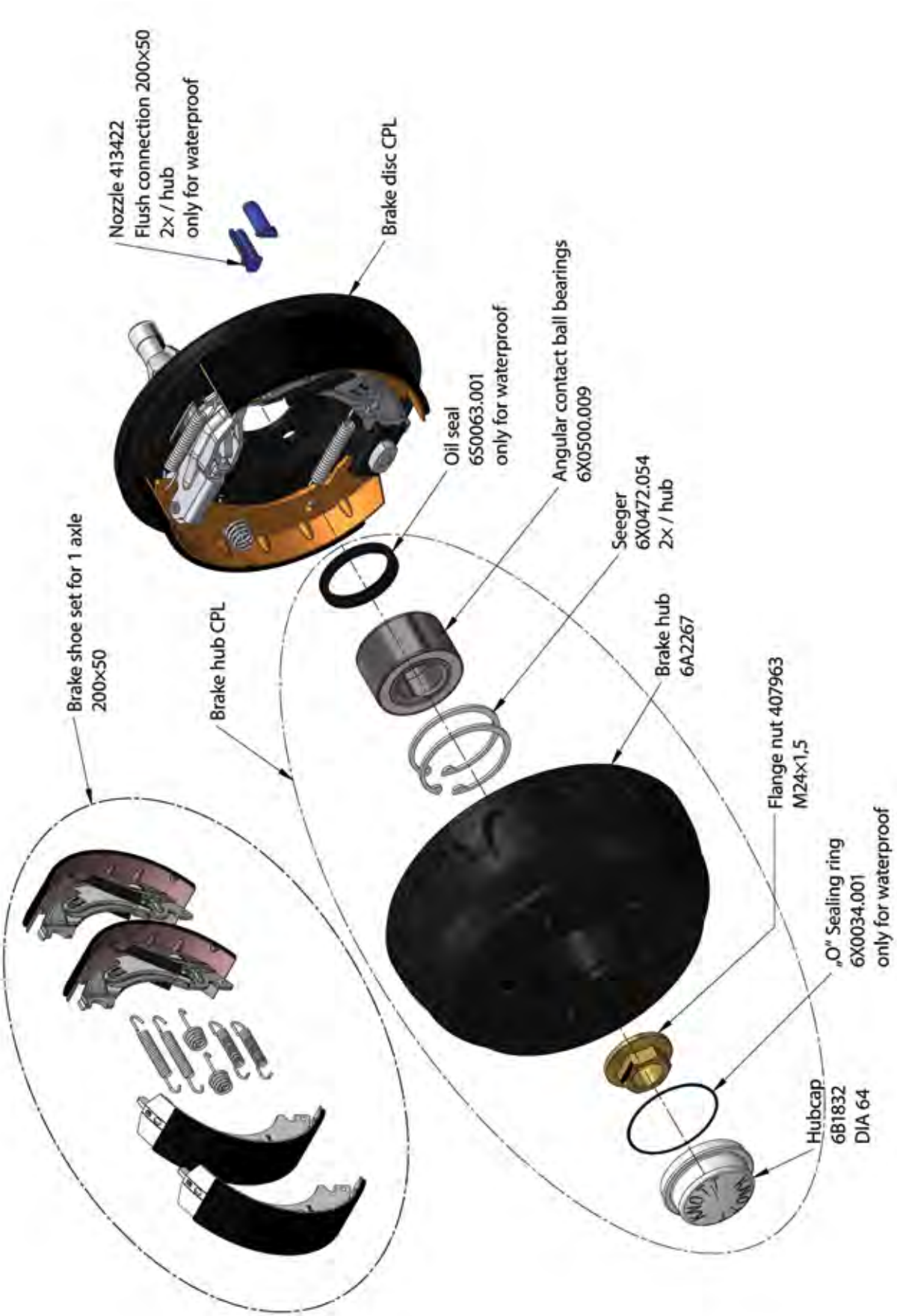

6BH888 - F200x50

Ref. nr.	Description	Brake hub set	Brake hub	Seeger 2x/hub	Angular contact ball bearings	Hub cap	Oil seal	„O" Sealing ring	Flange nut	Brake plate CPL		Brake shoe set for 1 axle
										L	R	
6BH888.010	112 x 5 ANS	6A2267.050	6A2267.001	6X0472.054	6X0500.009	6B1832C002	-	-	6B0053.001	413051.001	413051.002	409930.001
6BH888.009	112 x 5 Waterproof without brake disc	6A2267.254	6A2267.001	6X0472.054	6X0500.009	6B1832C017	6S0063.001	6X0034.001	6B0053.001	-	-	-
6BH888.008	112 x 5 Without brake disc	6A2267.050	6A2267.001	6X0472.054	6X0500.009	6B1832C002	-	-	6B0053.001	-	-	-
6BH888.007	112 x 5 Waterproof	6A2267.254	6A2267.001	6X0472.054	6X0500.009	6B1832C017	6S0063.001	6X0034.001	6B0053.001	26617.45	26617.46	47276
6BH888.006	112 x 5	6A2267.050	6A2267.001	6X0472.054	6X0500.009	6B1832C002	-	-	6B0053.001	26617.45	26617.46	47276
6BH888.005	100 x 4 ANS	6A2267.062	6A2267.002	6X0472.054	6X0500.009	6B1832C002	-	-	6B0053.001	413051.001	413051.002	409930.001
6BH888.004	100 x 4 Waterproof without brake disc	6A2267.155	6A2267.002	6X0472.054	6X0500.009	6B1832C017	6S0063.001	6X0034.001	6B0053.001	-	-	-
6BH888.003	100 x 4 Without brake disc	6A2267.062	6A2267.002	6X0472.054	6X0500.009	6B1832C002	-	-	6B0053.001	-	-	-
6BH888.002	100 x 4 Waterproof	6A2267.155	6A2267.002	6X0472.054	6X0500.009	6B1832C017	6S0063.001	6X0034.001	6B0053.001	26617.45	26617.46	47276
6BH888.001	100 x 4	6A2267.062	6A2267.002	6X0472.054	6X0500.009	6B1832C002	-	-	6B0053.001	26617.45	26617.46	47276

Spare parts for wheel brake F200x50 ETO

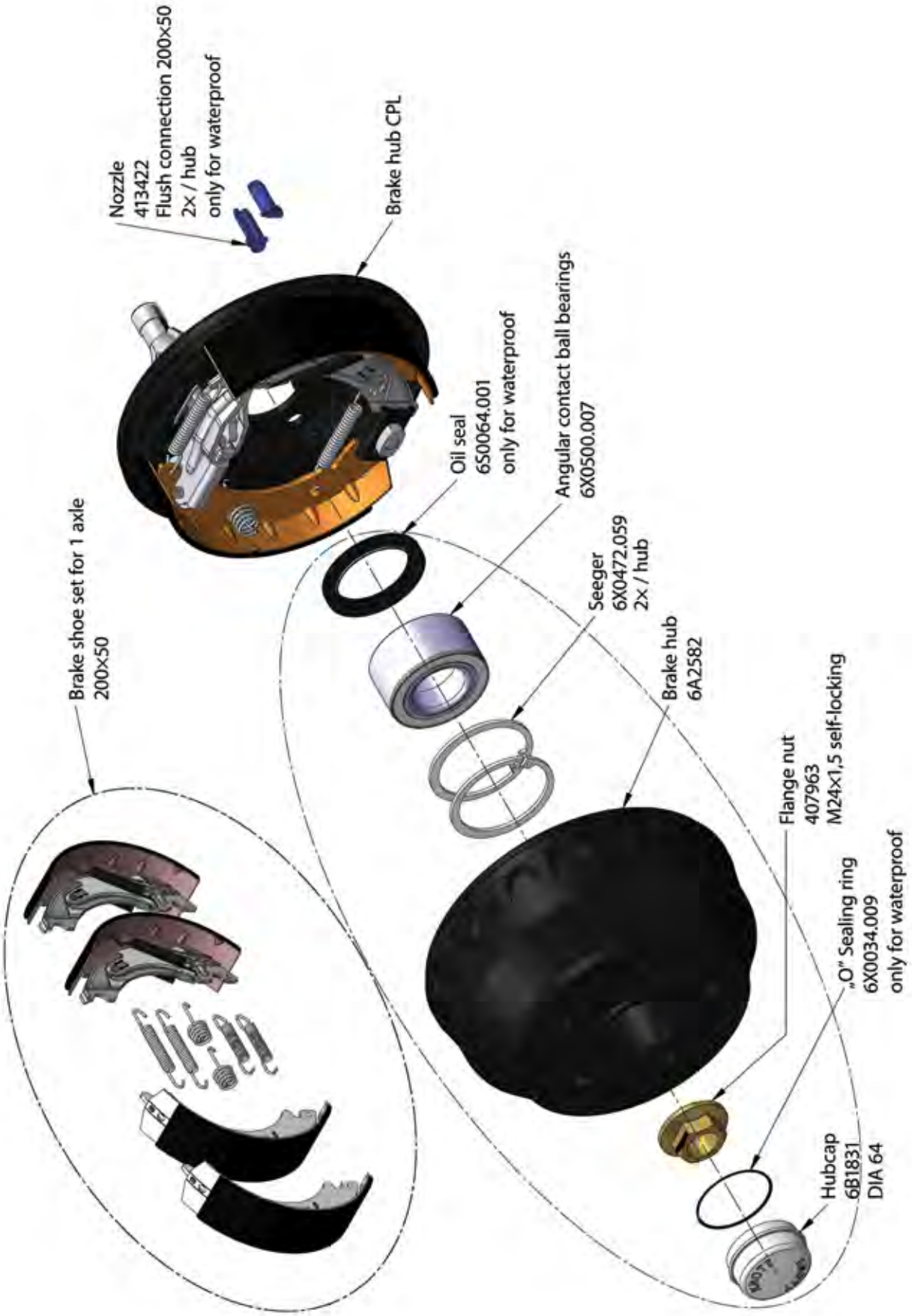

6BH889 - F200x50 ETO

Ref. nr.	Description	Brake hub set	Brake hub	Seeger 2x/hub	Angular contact ball bearings	Hub cap	Oil seal	„O" Sealing ring	Flange nut	Brake plate CPL		Brake shoe set for 1 axle	Flush connection 2x/hub
										L	R		
6BH889.006	112 x 5 ANS Waterproof	6A2582.031	6A2582.001	6X0472.059	6X0500.007	6B1831C017	6S0064.001	6X0034.009	6B0053.001	413051.001	413051.002	409930.001	413422.001
6BH889.005	112 x 5 ANS	6A2582.007	6A2582.001	6X0472.059	6X0500.007	6B1831C002	-	-	6B0053.001	413051.001	413051.002	409930.001	-
6BH889.004	112 x 5 Waterproof without brake disc	6A2582.031	6A2582.001	6X0472.059	6X0500.007	6B1831C017	6S0064.001	6X0034.009	6B0053.001	-	-	-	-
6BH889.003	112 x 5 without brake disc	6A2582.007	6A2582.001	6X0472.059	6X0500.007	6B1831C002	-	-	6B0053.001	-	-	-	-
6BH889.002	112 x 5 Waterproof	6A2582.031	6A2582.001	6X0472.059	6X0500.007	6B1831C017	6S0064.001	6X0034.009	6B0053.001	26617.45	26617.46	47276	413422.001
6BH889.001	112 x 5	6A2582.007	6A2582.001	6X0472.059	6X0500.007	6B1831C002	-	-	6B0053.001	26617.45	26617.46	47276	-

Spare parts for wheel brake F250x40

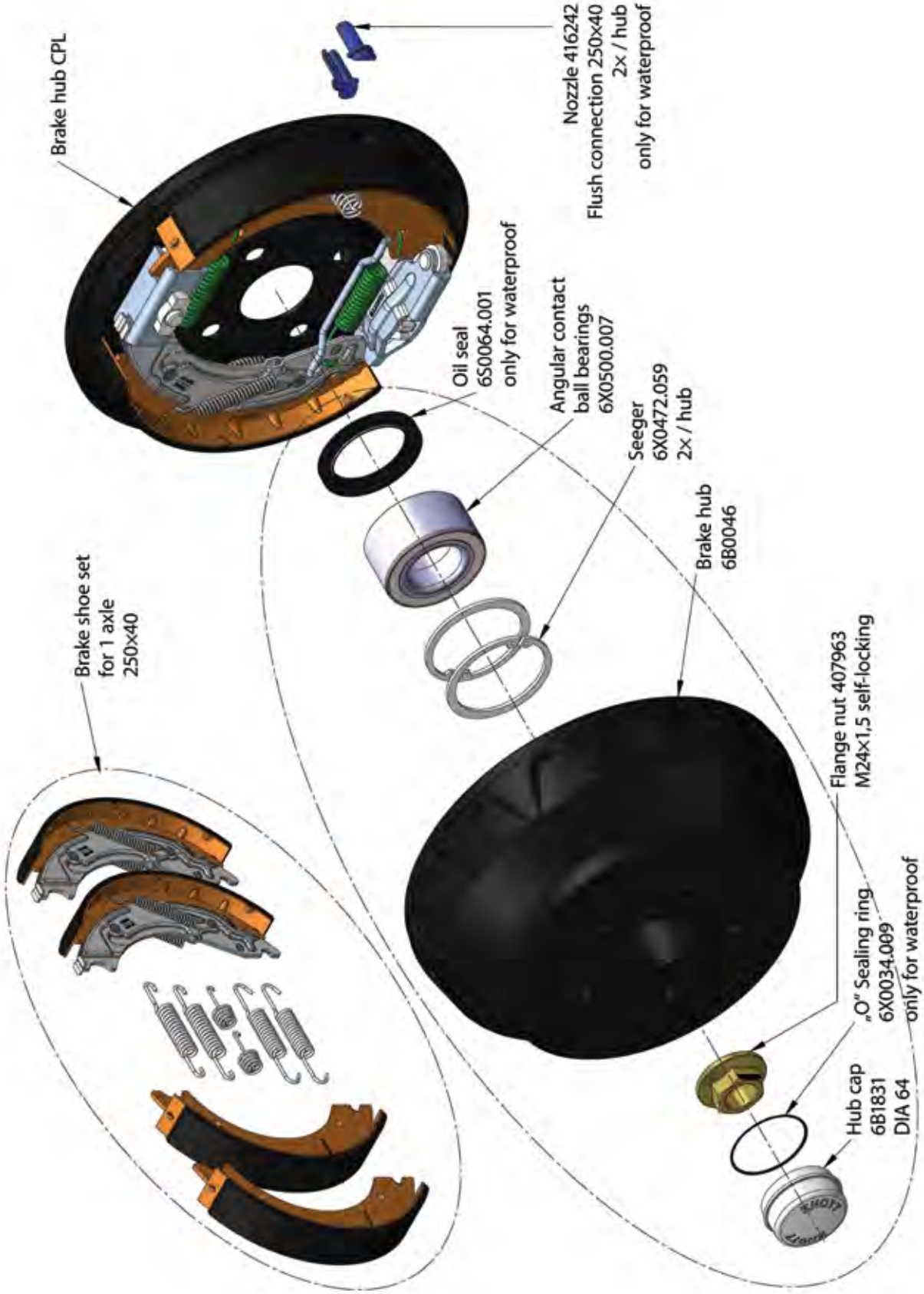

6BH890 - F250x40

Ref. nr.	Description	Brake hub set	Brake hub	Seeger 2x/hub	Angular contact ball bearings	Hub cap	Oil seal	„O" Sealing ring	Flange nut	Brake plate CPL		Brake shoe set for 1 axle	Flush connection 2x/hub
										L	R		
6BH890.006	112 x 5 ANS Waterproof	6B0046.045	6A2582.001	6X0472.059	6X0500.007	6B1831C017	6S0064.001	6X0034.009	6B0053.001	413066.007	413066.008	409931.001	416242.001
6BH890.005	112 x 5 ANS	6B0046.004	6A2582.001	6X0472.059	6X0500.007	6B1831C002	-	-	6B0053.001	413066.007	413066.008	409931.001	-
6BH890.004	112 x 5 Waterproof without brake disc	6B0046.045	6A2582.001	6X0472.059	6X0500.007	6B1831C017	6S0064.001	6X0034.009	6B0053.001	-	-	-	-
6BH890.003	112 x 5 without brake disc	6B0046.004	6A2582.001	6X0472.059	6X0500.007	6B1831C002	-	-	6B0053.001	-	-	-	-
6BH890.002	112 x 5 Waterproof	6B0046.045	6A2582.001	6X0472.059	6X0500.007	6B1831C017	6S0064.001	6X0034.009	6B0053.001	412435.997	412435.998	402677.001	416242.001
6BH890.001	112 x 5	6B0046.004	6A2582.001	6X0472.059	6X0500.007	6B1831C002	-	-	6B0053.001	412435.997	412435.998	402677.001	-

Spare parts for wheel brake 250x50 ETO

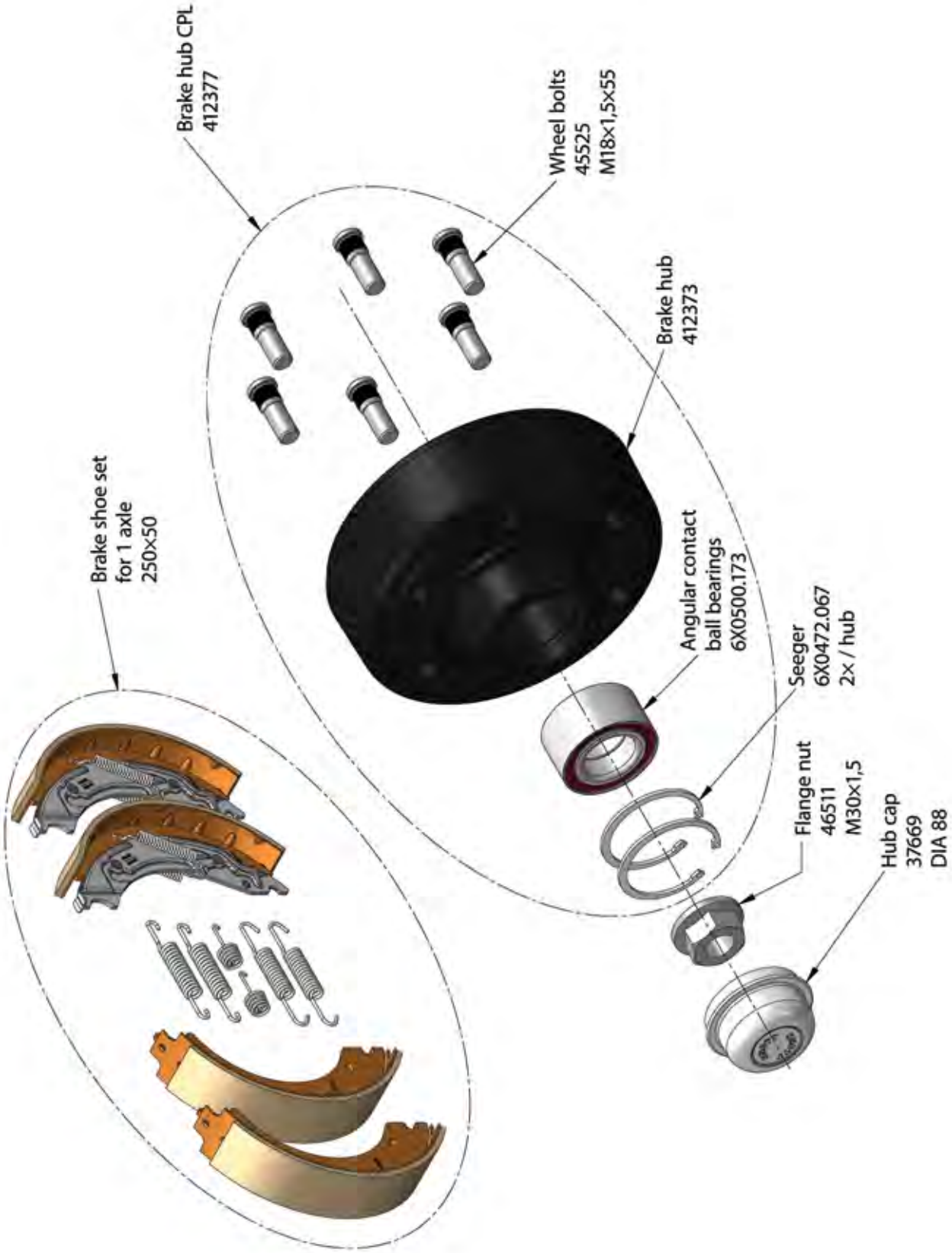

6BH900 - 250x50 ETO

Ref. nr.	Description	Brake hub set	Brake hub	Seeger 2x/hub	Angular contact ball bearings	Hub cap	Flange nut	Brake shoe set for 1 axle
6BH900.002	205 x 6 ANS	412377.001	412373.001	6X0472.054	6X0500.173	376694	6511	416158.001
6BH900.001	205 x 6	412377.001	412373.001	6X0472.054	6X0500.173	376694	6511	416163.001

Rubber suspension axle with auto-reverse drum brake

Product can be used for:
- jet skis
- snow-mobiles
- dog trailers
- utility trailers such as generators
- boat trailers
- horse trailers

Standard surface treatment:
- hot-dip galvanization

Load capacity:
- 750 to 2500 kg

Bearing type:
- compact ball bearing with long lifetime
- taper roller bearing

The product package includes:
- axle with torsion rubber and type plate
- brake drum
- swing arm

Additional equipment:
- brake cable
- balance
- brake cable holder
- bracket
- shock absorber
- self-adjusting brake for 200, 250 and 300 brakes

If you are interested in our product, please give the following parameters to our sales personnel to help you choose the best type suited to your needs:
- **H, c, b size**
- **load capacity**
- **wheel connection**
- **offset**

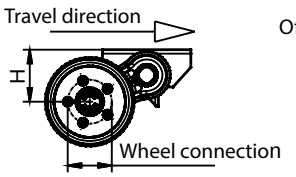

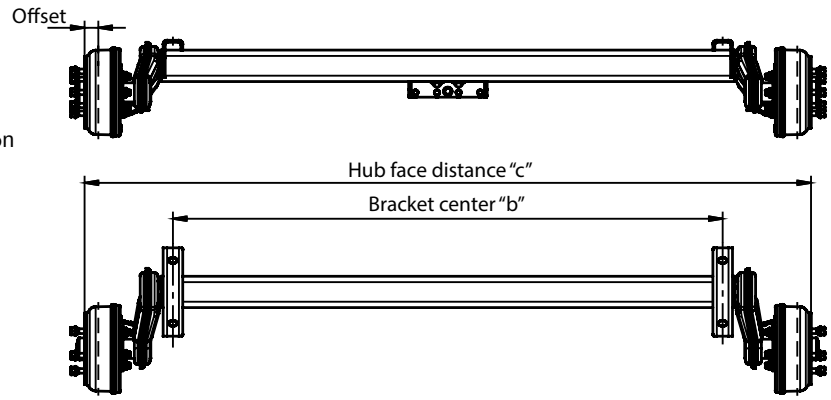

■ Axle load capacity up to 2500 kg

Rubber suspension bended axle with auto-reverse drum brake

Product can be used for:
- boat trailers

Standard surface treatment:
- hot-dip galvanization

Load capacity:
- 750 to 1800 kg

Bearing type:
- compact ball bearing with long lifetime
- conical bearing

Advantages:
- The new design allows easier the transportation of boats and other vehicles.
- The lower centre of gravity makes it more stable.

If you are interested in our product, please give the following parameters to our sales personnel to help you choose the best type suited to your needs:
- **H, c, b size**
- **load capacity**
- **wheel connection**
- **offset**

■ Axle load capacity up to 1800 kg

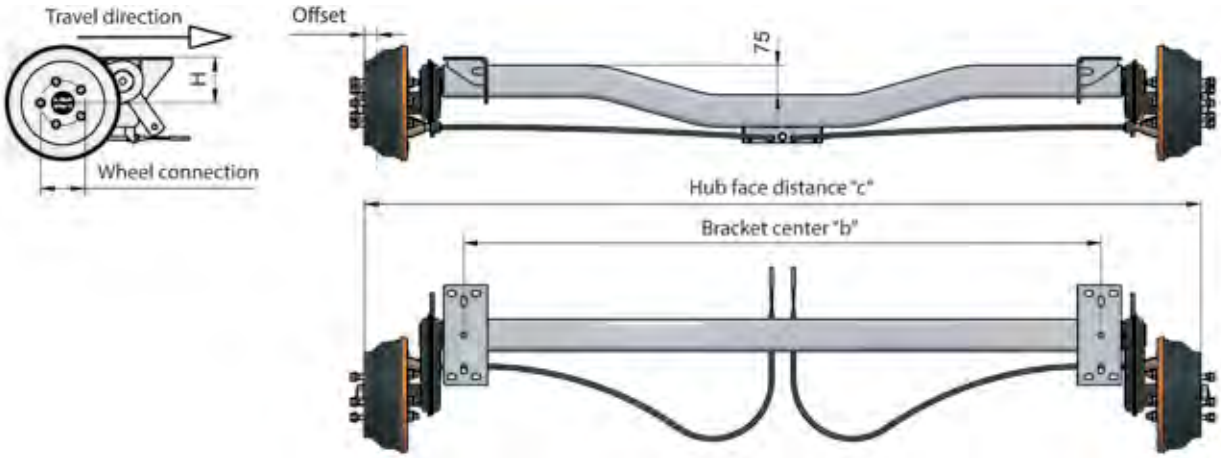

Rubber suspension tandem axle with auto-reverse drum brake

Product can be used for:
- utility trailers
- horse trailers

Standard surface treatment:
- hot-dip galvanization

Load capacity:
- 1500 to 3500 kg

Bearing type:
- compact ball bearing with long lifetime
- taper roller bearing

The product package includes:
- axle with torsion rubber and type plate
- brake drum
- swing arm

Mounting types:
- welded
- bolted

Additional parts:
- brake cable
- balance
- brake cable holder
- bracket
- shock absorber
- self-adjusting brake for 200, 250 and 300 brakes

If you are interested in our product, please give the following parameters to our sales personnel to help you choose the best type suited to your needs:
- **H, c, b size**
- **load capacity**
- **wheel connection**
- **offset**

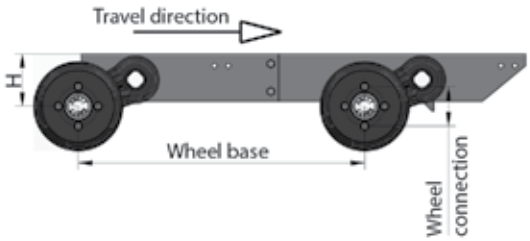

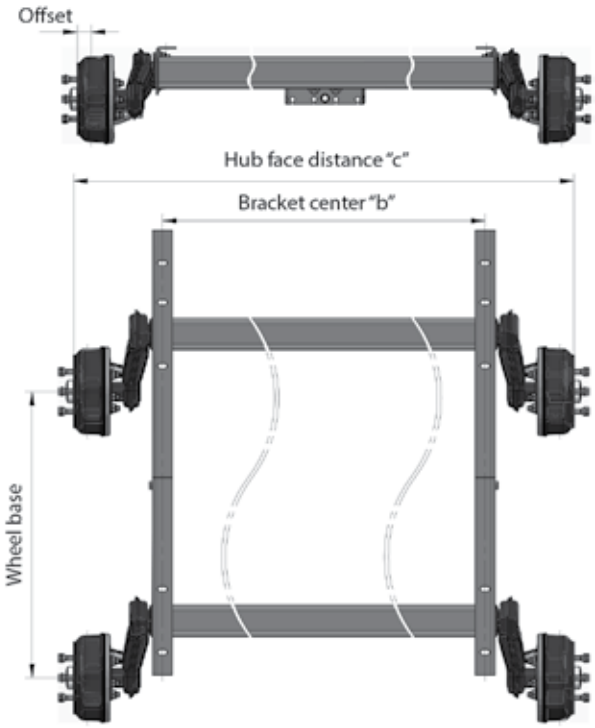

■ Axle load capacity up to 3500 kg

Safety & comfort - simple and easy to maintain

1. **Replacing the wheel or the brake** can be done within a couple of minutes.
   There are only 4 or 5 nuts to be loosened and the whole wheel can be removed together with the brake and the bearing.

2. **Camber and toe-in positioning in factory conditions**

3. **Protection against corrosion even in extreme circumstances:**
   - Completely galvanized brake
   - High endurance
   - Clear visibility of the brake linings

4. **The bearing of the wheel is protected against contamination and water**
   The bearing is treated with special lubricant and maintenance-free.

5. **Bowden cable connection system**
   Without disassembling it, a brake cable is attached to the brake mechanism.

6. **Self-locking axle nut**
   A torque of 280 Nm ensures the proper position of the bearing.

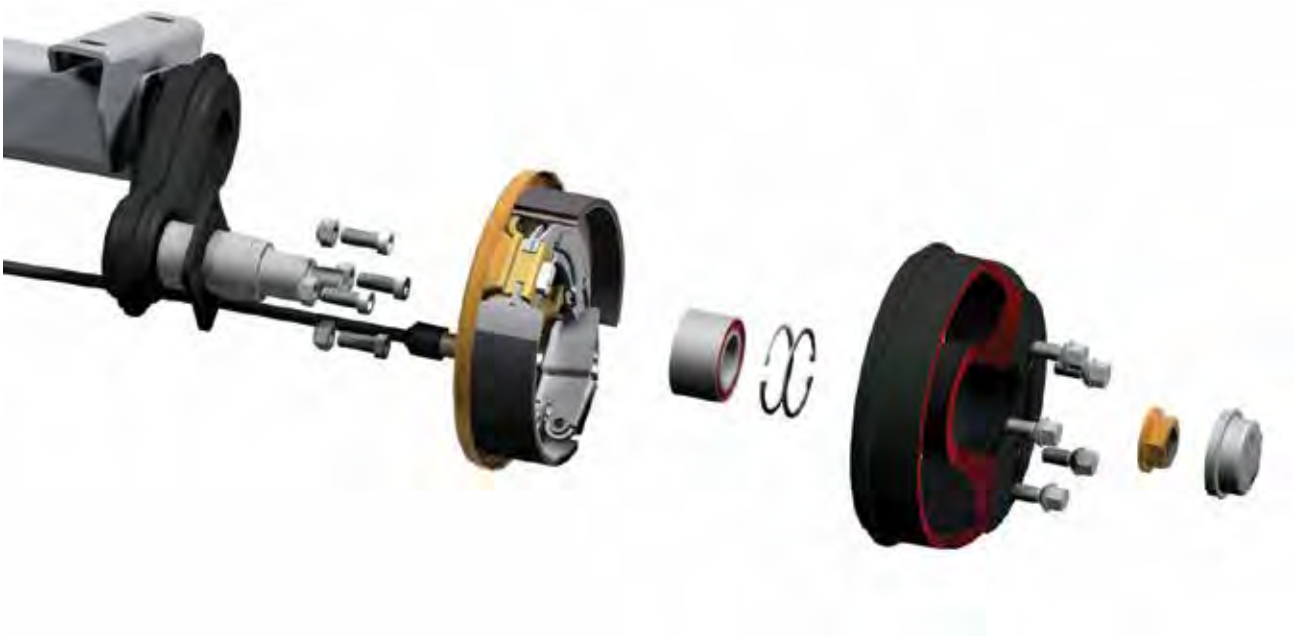

DOUBLE ROW ANGULAR BEARING

Heavy duty, maintenance free, water resistant double row bearings

Heavy duty, maintenance free, water resistant double row bearings are applied in the axle series production.

In connection with the mechanical characteristics, the influence line of angular bearing with ball-row distance of 17 mms, is equivalent to two pieces of taper roller bearings with a roller distance of 55 mm.

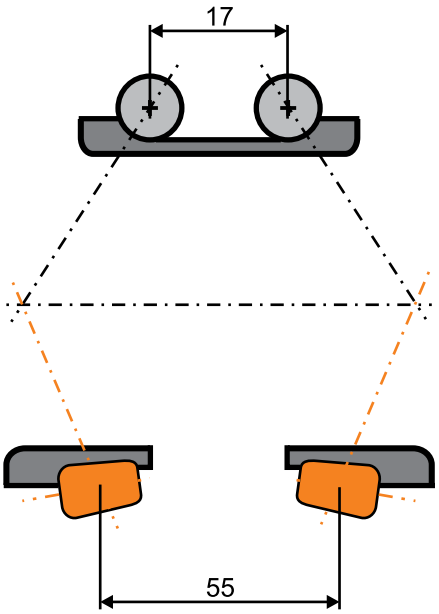

BALANCE BAR

New balance bar kit for single axle

Mounting kit for old version brake cables with hexagon nut

Art. nr.
410335.001

Mounting kit for old version brake cables with self-locking hexagon nut

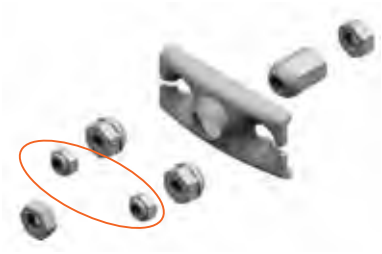

Art. nr.
409905.001

New balance bar mounting kit for new brake cables

Art. nr.
409904.001

New balance bar kit for tandem axle

New balance bar kit for tandem axle with self-locking hexagon nut

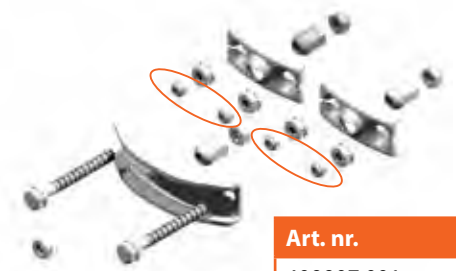

Art. nr.
409907.001

New balance bar kit for tandem axle

Art. nr.
409906.001

An example for mounting the old version brake cables for tandem axle

An example for mounting the new version brake cables for tandem axle

BRAKE ROD, BOWDEN CABLE

Our brake rods come with the following dimensions:

A = between 400 and 2000 mm
B = 50 mm
C = between 50 and 300 mm length

Drawing number: **6B1842**

Different sizes can be provided on request.

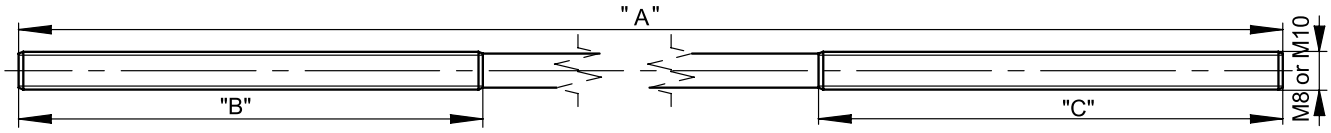

Standard trailer brake cable

Our trailer brake cables come with the following dimensions:

H = between 530 and 2230 mm
S = between 720 and 2420 mm length

Different sizes can be provided on request.

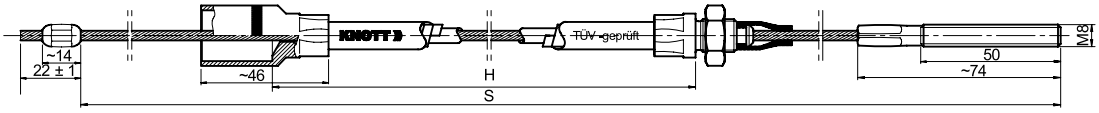

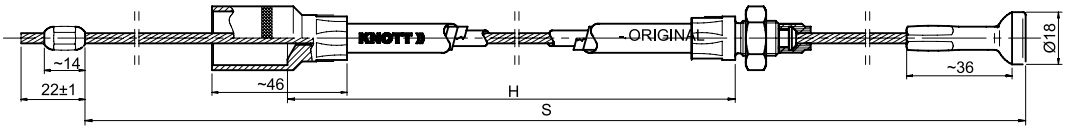

Stainless steel trailer brake cable

The stainless steel cable is made of corrosion resistant steel, the threaded end and sleeve are treated with high corrosion protection in extreme conditions.

Simple installation of the brake cable

1. Remove the protective cover
2. Lift the upper part of the cable bracket

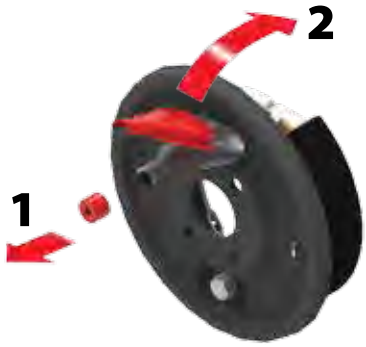

3. Connect the end of the brake cable

4. Close the cable bracket cover
5. Move the cover of the cable forward

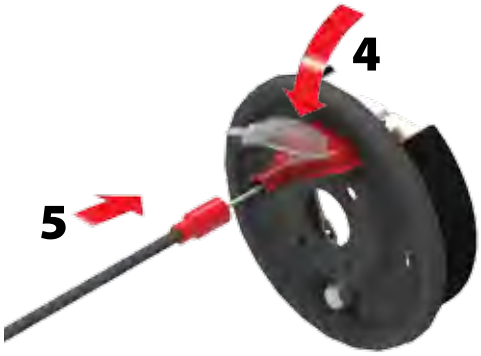

6. The brake mechanism is ready for use.

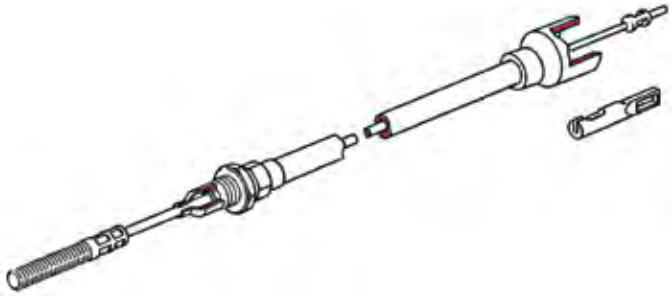

THE NEW RANGE OF STAINLESS STEEL BRAKE CABLES

The Zinc-Nickel finishing of our new range of stainless steel brake cables increases their resistance to oxidation.

Compared to the standard versions the stainless steel inner cable's construction has a significantly greater efficiency and lifespan - as proven by our salt spray laboratory testing.
Additionally the inner stainless cable is lubricated in order to obtain the highest quality and durability, reducing the friction with the outer cable.

- KNOTT stainless steel brake cables with zinc-nickel plating guarantee the highest quality, durability and comfort.

Flange - Flange c	H	S	Order number
1450	730	920	980207.06
1550	730	920	980207.06
1650	730	920	980207.06
1750	830	1020	980207.07
1850	830	1020	980207.07
1950	1030	1220	980207.07
2050	1030	1220	980207.11
2150	1030	1220	980207.11
2250	1230	1420	980207.14
2350	1230	1420	980207.14

Ausführung der Radschrauben
Kugelbundschraube M12x1.5
Artikel–Nr.43694.01 (Kugel ø24)
wahlweise
Kugelbundschraube M12x1.5
Artikel–Nr.43695.01 (Kugel ø28)
wahlweise
Kegelbundschraube M12x1.5
Artikel–Nr.43696–1.01 (Kegel 60°)
A–A
Fahrtrichtung
60
25
ø10
ET 26–35 mm
Zul.Achslast: 400–750kg
20
25
ø13(2x)
200
140
91.5
Typenschild
150
ø56
ø60x3.6
A
Achtung!
Anzugsmoment
für
Sicherheitsmutter
280Nm (28kpm)
Spur 'a'
Flansch–Flansch 'c'
Typbezeichnung der Bremse 20–2425/1
EG–Prüfprotokoll Nr.: 361–311–83
Achslast max. 750 kg
bei tandem 2x750 max. 1500 kg

RIGID AXLES

LOADING RAMPS

- Knott offers high capacity and lightweight loading ramps.
- The capacity of our loading ramps range from 400 to 4000 kg (per pair of ramps).
- The range of available length is also wide, from 1500 mm up to 3000 mm.
- Depending on your needs, we offer deflected and non-deflected loading ramps.
- Non-deflected loading ramps are also available in a reinforced version where capacity can range up to 4000 kg at a length of 3000 mm – Cat. No. 408970.002.
  The non-reinforced loading ramp of the same size has a capacity up to 2000 kg (per pair of ramps) – Cat. No. 408970.001
- The deflected loading ramps intended for lower loads are available in 3 length options and 2 width options.
- The maximum capacity of deflected loading ramps is 1000 kg.

How to determine the vehicle length correctly:

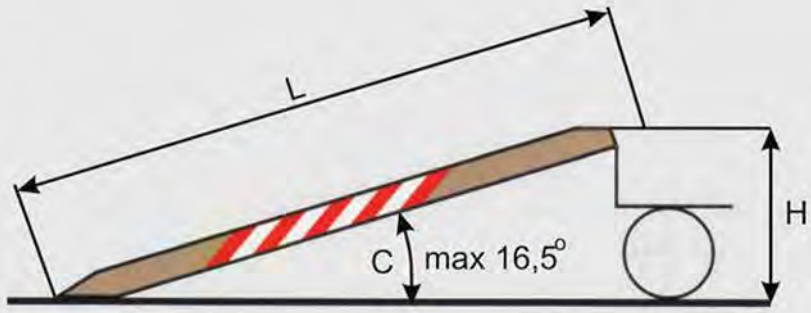

$$L = \frac{H}{C} \times 100$$

where:
- vehicle length [mm]
- height [mm]
- inclination [%]

Safety rules:
- The inclination of loading ramps cannot exceed 30%, which corresponds to the angle of approx. 16.5°.
- The loading ramp must be fixed at the end to prevent it from falling

KNOTT AUTÓFLEX-GROUP

Unbraked rigid axle

Product can be used for:
- utility trailers

Standard surface treatment:
- hot-dip galvanization
- paint

Load capacity:
- 500 kg to 1800 kg

Axle body type:
- tube
- square tube

Bearing type:
- compact ball bearing with long lifetime
- taper roller bearing

The product package includes:
- axle with type plate
- hub or drum brake

NEW DESIGN!

Solid axle with additional protector cup
It protects the seal against stones
and debris in a harsh environment.

Additional:
- leaf spring
- shock absorber
- protector cup

If you are interested in our product, please give the following parameters to our sales personnel to help you choose the best type suited to your needs:
- **c, b size**
- **load capacity**
- **wheel connection**
- **offset**

■ Axle load capacity up to 1800 kg

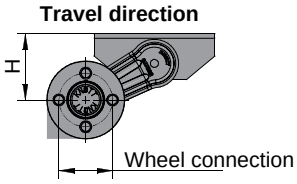

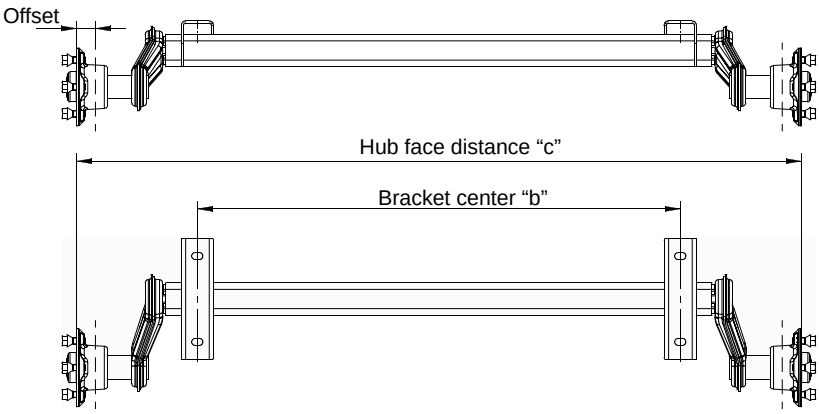

Rigid axle with auto-reverse drum brake

■ Axle load capacity up to 1800 kg

Mounting of the Leaf Spring

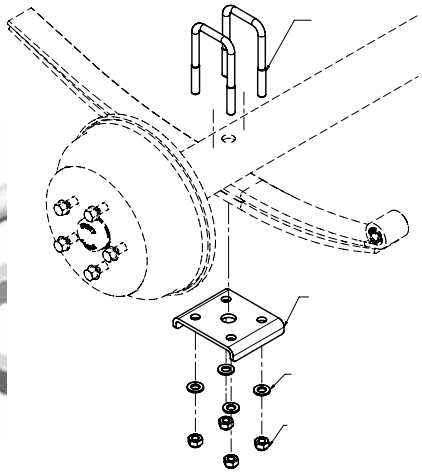

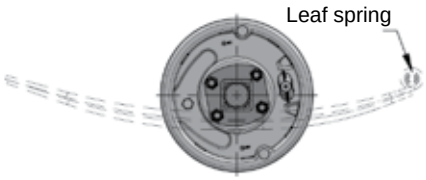

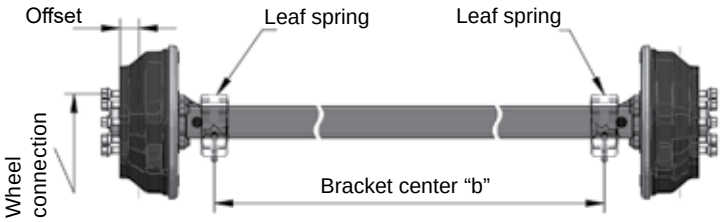

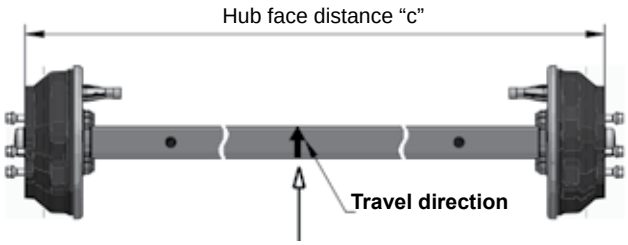

■ For more sizes and info please contact our sales personnel!

Mounting of the leaf spring

№	Pcs	Spare part name
1	1	Frame kpl.
2	2	Leaf spring
3	1	Axle cpl.
4	2	Bolt-on element
5	4	U-Bolt
6	8	Washer
7	12	Hex lock nut
8	2	Shock absorber
9	2	Hex. bolt
10	4	Hexagon nut
11	2	Hex. bolt

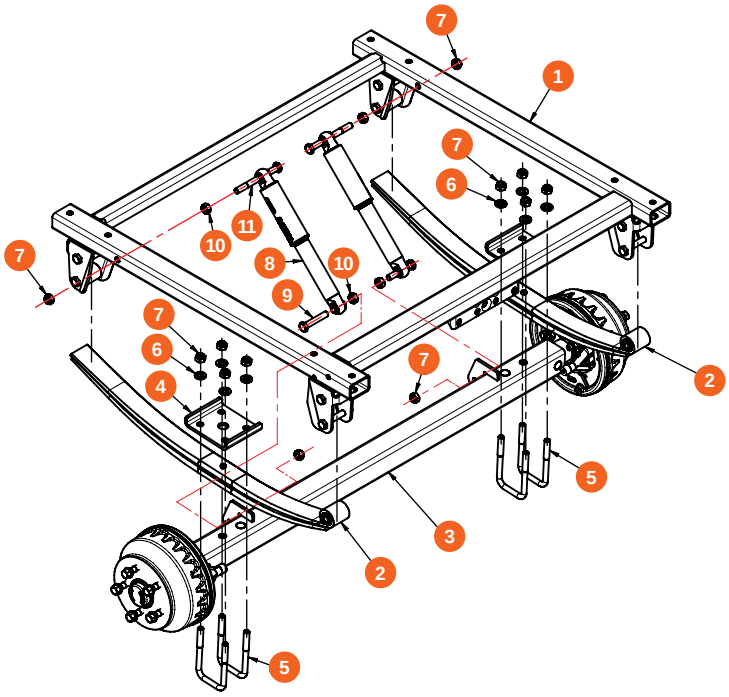

U-Bolt

Used for fixing:

- axles
- mudguards
- rollers
- glide bunk
- winches
- jacks
- and other trailer part elements

Art. nr.	H (mm)	B (mm)	Art. nr.	H (mm)	B (mm)
6X1126.001	110	52	6X1126.022	120	100
6X1126.002	120	52	6X1126.023	150	90
6X1126.003	130	52	6X1126.024	120	82
6X1126.004	150	52	6X1126.025	140	60
6X1126.005	170	52	6X1126.026	90	40
6X1126.006	110	42	6X1126.027	80	60
6X1126.007	130	42	6X1126.028	170	60
6X1126.008	150	42	6X1126.029	160	41
6X1126.009	120	60	6X1126.030	140	106
6X1126.010	120	40	6X1126.031	180	41
6X1126.011	150	60	6X1126.032	115	61
6X1126.012	150	100	6X1126.033	80	86
6X1126.013	150	80	6X1126.034	140	42
6X1126.014	90	60	6X1126.035	140	53
6X1126.015	150	120	6X1126.036	80	74
6X1126.016	90	80	6X1126.037	70	62
6X1126.017	140	70	6X1126.038	105	62
6X1126.018	70	80	6X1126.039	70	86
6X1126.019	140	40	6X1126.040	170	42
6X1126.020	105	100	6X1126.041	130	106
6X1126.021	100	100	6X1126.042	145	56

LEAF SPRING FOR RIGID AXLES

6X1356.001

- Double-eye leaf spring (6 mm leaf 6 pcs)
- Spring capacity: 375 kg
- Self weight: 11 kg

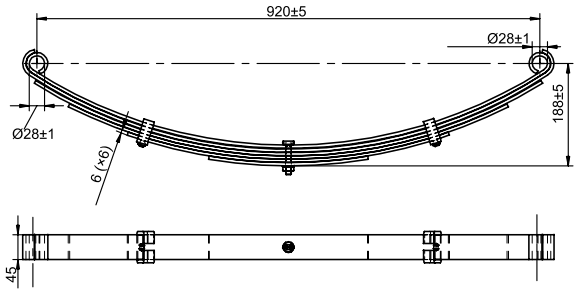

6X1356.004

- Open-eye leaf spring with flat end (8 mm leaf 3 pcs)
- Spring capacity: 375 kg
- Self weight: 6,6 kg

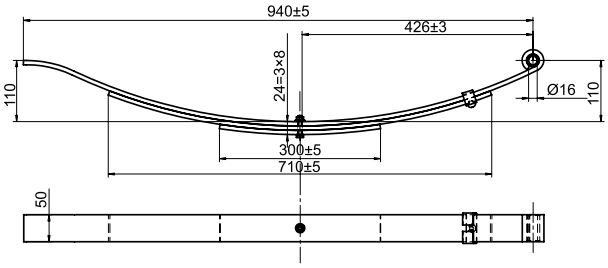

6X1356.010

- Open-eye leaf spring with flat end (6 mm leaf 3 pcs)
- Spring capacity: 375 kg
- Self weight: 5,6 kg

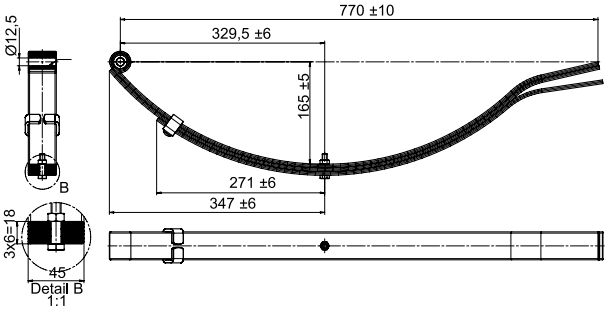

6X1356.009

- Open-eye leaf spring with flat end (8 mm leaf 4 pcs)
- Spring capacity: 450 kg
- Self weight: 8 kg

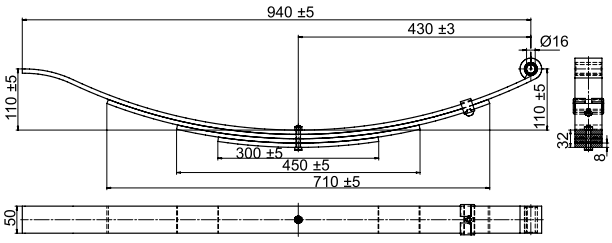

6X1356.011

- Open-eye leaf spring with flat end (6 mm leaf 4 pcs)
- Spring capacity: 450 kg
- Self weight: 8,5 kg

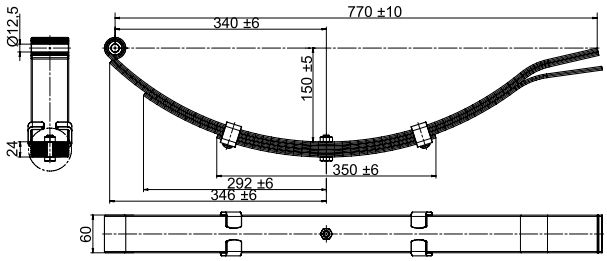

6X1356.006

- Double-eye leaf spring (6,5 mm leaf 10 pcs)
- Spring capacity: 900 kg
- Self weight: 18,8 kg

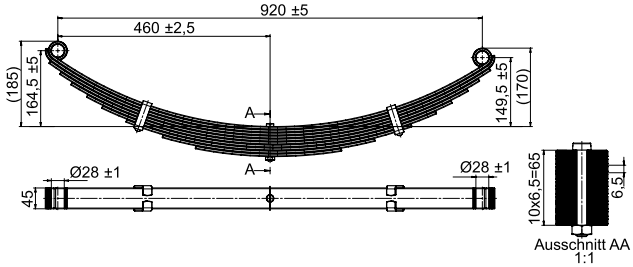

6B4699.001

- Open-eye parabolic leaf spring with flat end (7-15 mm leaf 1 pcs)
- Spring capacity: 500 kg
- Self weight: 3,7 kg

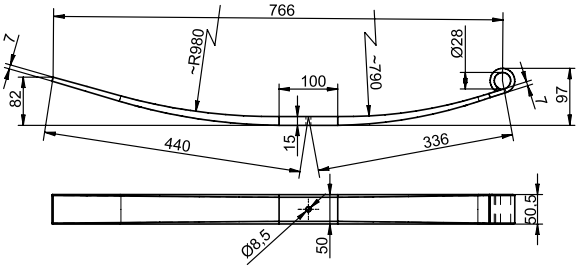

6B4590.001

- Open-eye parabolic leaf spring with flat end (7-15 mm leaf 2 pcs)
- Spring capacity: 900 kg
- Self weight: 7,3 kg

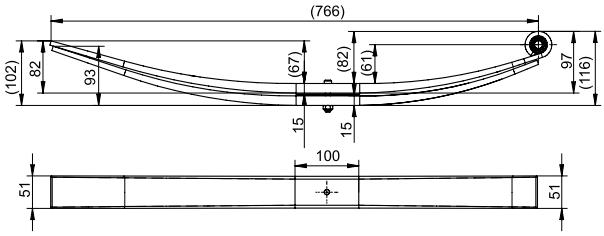

Mounting option of the leaf spring

№	Pcs	Spare part name
1	1	Frame kpl.
2	4	Leaf-spring
3	2	Axle cpl.
4	4	Bolt-on element
5	8	U-Bolt
6	16	Washer
7	24	Hex lock nut
8	4	Shock absorber
9	4	Hex. bolt
10	8	Hexagon nut
11	4	Hex. bolt

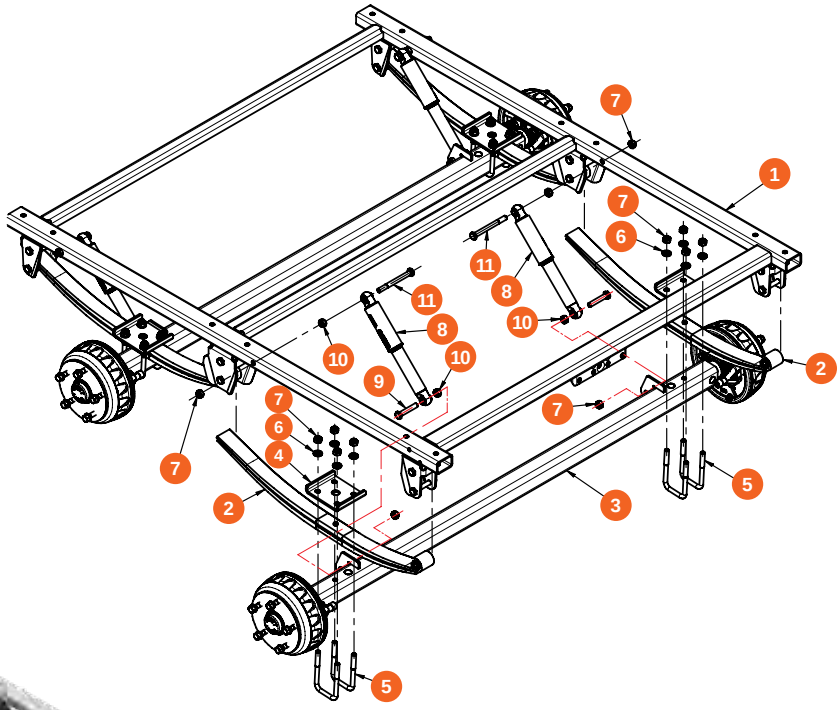

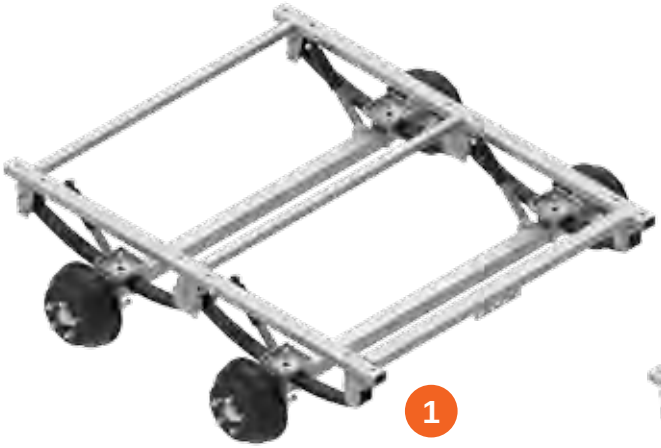

The leaf springs can be overslung (placed over the axle) (1) or underslung (placed under the axle) (2).
Either way, the U-bolts fit around the axle and secure the metal plate that rests against the leaf springs.

Rubber buffer

6BB471.001

VRB Braked axle with disc brake

Type	Load capacity (kg)	c (mm)	b (mm)	PCD (mm)	Offset (mm)	Art. nr.
VRB18-MV	1800	2070	1550	Ø112×5	25-35	6AE925.001

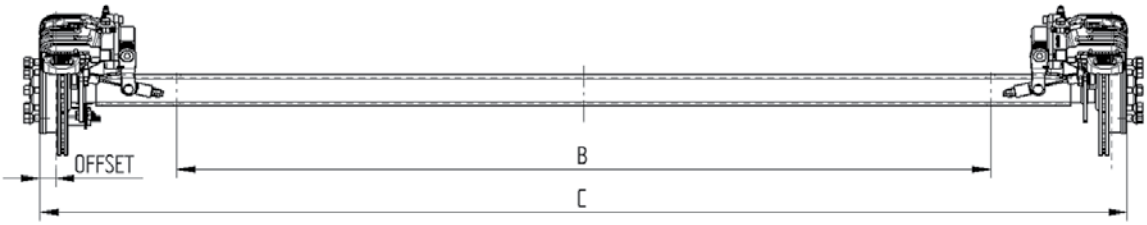

Four are better than three.

Safer journeys with the original comfort axle from KNOTT.

A (R)Evolutionary advancement in safety.

The secret behind our new original KNOTT comfort axle lies in its special shape and a "cool" idea. We cool the four rubber elements down to around –100 °C during production. This causes them to shrink so that they can be pushed gently into the gap between the axle tube and the inner member. The accurate ft means improved suspension and the over hub face dimension of the axle can also be set with greater precision.

Deep-freeze technology
Extreme cold for extremely good suspension characteristics.

Why choose the KNOTT comfort axle?

- not three but four rubber elements for improved safety and comfort
- better trailer stability
- outstanding longevity
- greater precision when setting the over hub face
- the inner member is prevented from rotating in the event of overload

Wir are original Knott.
Road safety has been our driving force since 1937. Years of experience and our knowledge of proven industrial processes, materials and quality are what makes our original KNOTT products better.

Want to know more?
Please contact us:
KNOTT Trailertechnik
Phone: +49 9402 9317-0
email: info@knott.de
www.knott.de/trailertechnik

Why four are better than three

Are you already safely on the road with your caravan or trailer? It's worth noting that on many rubber torsion spring axles the suspension load is distributed over just three rubber elements.

We insist upon using four rubber elements at the heart of our axles;

- for greater resistance against dangerous swaying
- because they surround a larger area of the inner member preventing the axle from "steering".
- for greater stability
- for better suspension characteristics and a signifcantly more accurate suspension setting

For more comfort and safety on all your journeys.

But all good things can be made better.

The square axle inner tube has concave sides, this guarantees **accuracy of assembly, long service life and outstanding suspension characteristics.** Our comfort axle adapts to different road conditions like no other; a smooth and comfortable ride whether the trailer or caravan is partially or fully laden – coupled with a large safety factor in case of overload.
Your journeys are now even safer with original KNOTT trailer technology, no matter what type of trailer you have.

0° = unloaded

Not three but four rubber elements surround the inner member of the original KNOTT axle to provide greater towing stability

Rubber cross section 4 x approx. 600 mm2

15° = 1,0 x nominal load

The inner member gently flexes the rubber thanks to its unique shape, instead of crushing it: for a long service life and signifcantly more comfortable ride.

30° = 2,0 x nominal load

The **clever bead** in the axle tube prevents the inner member from rotating in the event of overload.

KNOTT AUTÓFLEX-GROUP

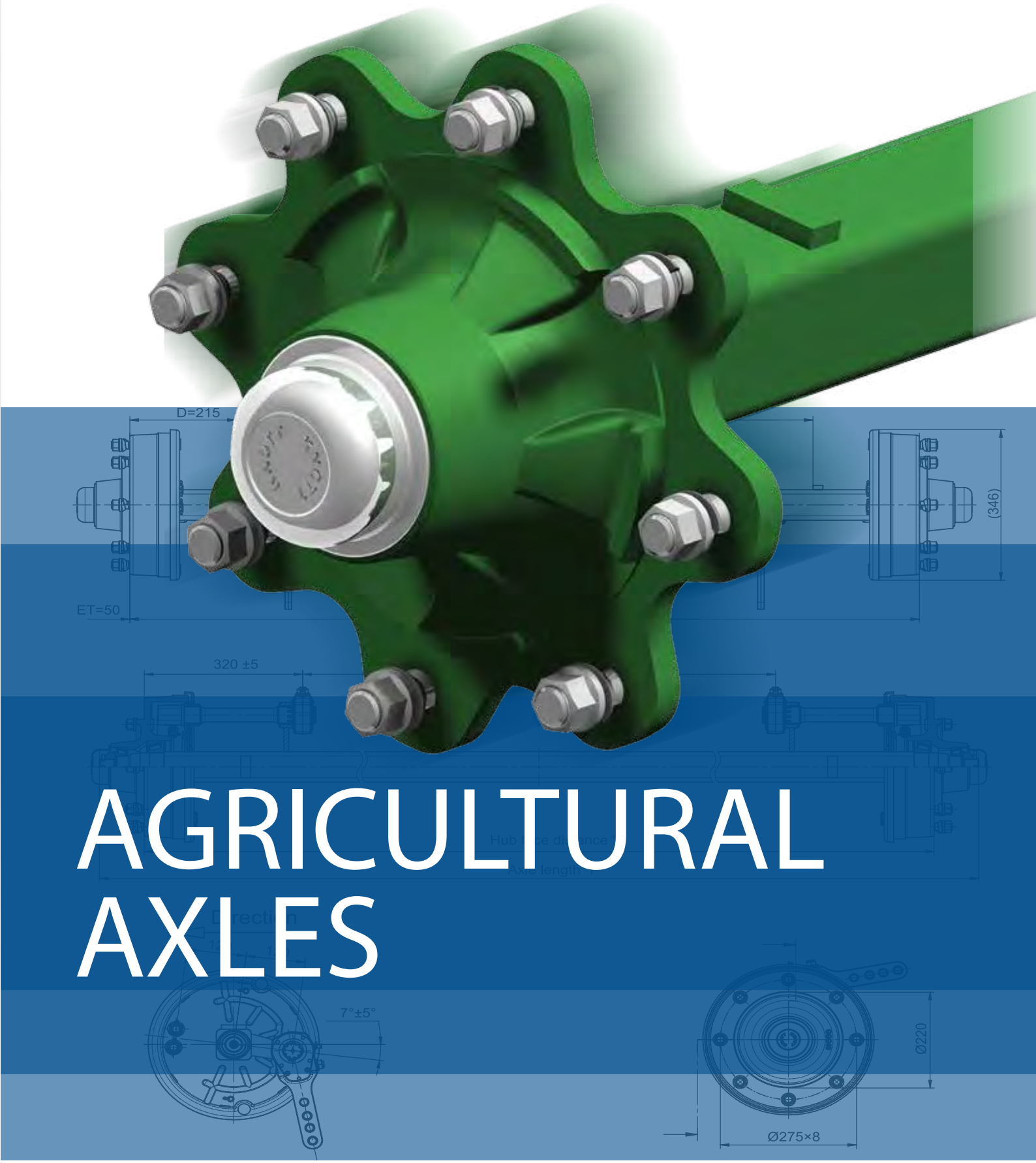

AGRICULTURAL AXLES

Unbraked half-axle for agricultural rigid axles

FNK46

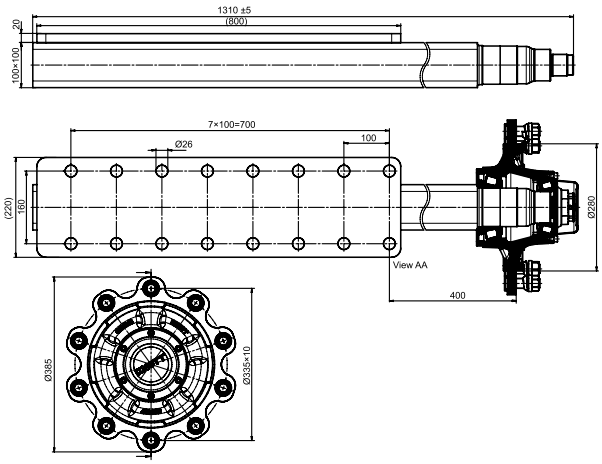

Type	40 km/h			Offset (mm)	PCD (mm)	Center hole (mm)	Art. nr.
FNK63	825	975	725	0	Ø140×5	94	6BC195.001
FNK45	1350	1600	1200	0	Ø205×6	160	6BE599.001
FNK62	1750	2050	1500	0	Ø205×6	160	6BF120.001
FNK47	2000	2500	1750	0	Ø205×6	160	6B7455.001
FNK61	3250	3750	3000	0	Ø205×6	160	6BC193.001
FNK44	3350	3700	3000	0	Ø275×8	220	
FNK59	3850	4200	3500	0	Ø205×6	160	6BB565.001
FNK60	4000	4500	3750	0	Ø275×8	220	6BE747.001
FNK46	5500	6250	4750	0	Ø335×10	280	6B7445.001
FNK64		3500			Ø205×6	160	6BE550.001
FNK65		6000			Ø129×6	160	

Unbraked hub and stub for agricultural axles

FNK66

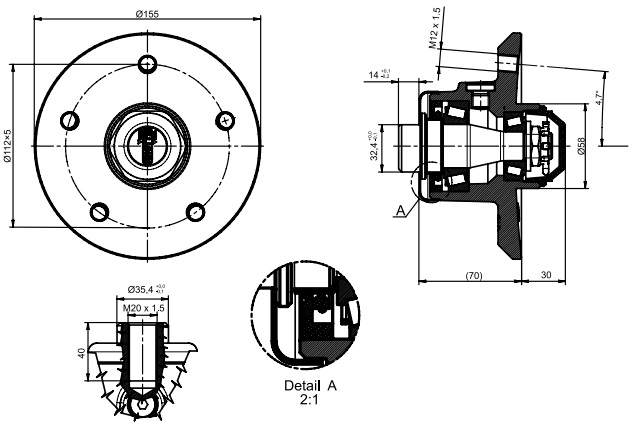

Unbraked hub and stub for agricultural rigid axles

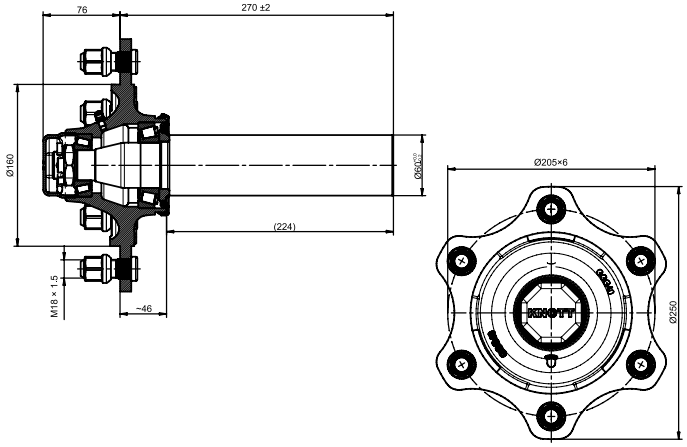

FNK45

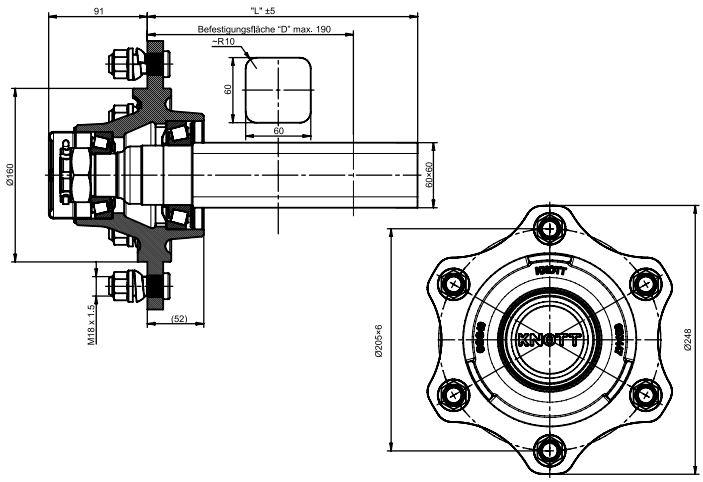

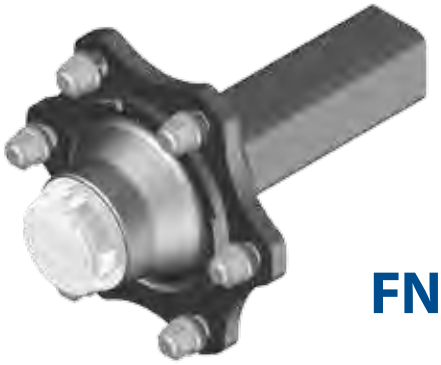

FNK47

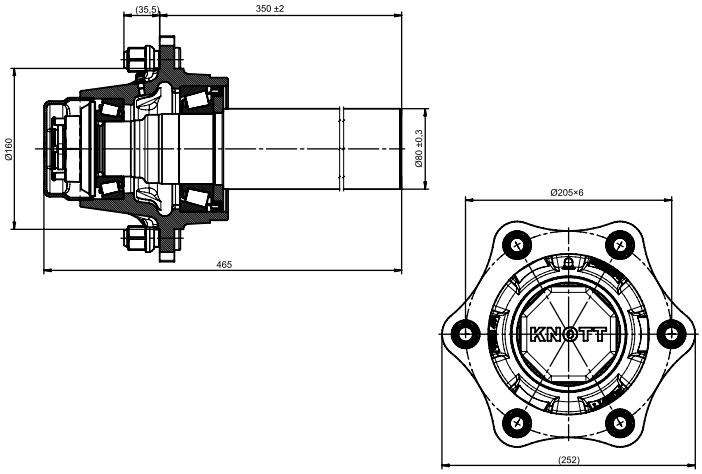

FNK59

RIGID AXLES FOR AGRICULTURAL MACHINERY

Slack adjuster

KNOTT AUTÓFLEX-GROUP

BRAKED AXLE FOR AGRICULTURAL MACHINERY

6AC342.001

Axle	
Drawing №:	6AC342
Brake:	250×40
Brake type:	25-2025
Certification:	361-007-94
Automatic reverse control:	Backmat
Center hole:	Ø160
Type	**VRB27 200**
Article №:	6AC342.001
Brake control:	spread lever
Status:	-
Greasing nipple:	none
PCD:	205×6

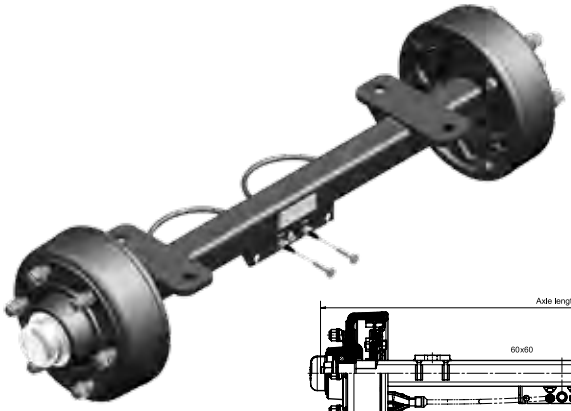

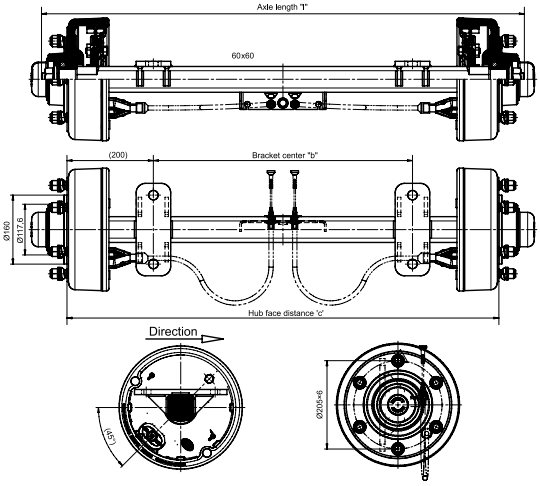

VRB27	Speed	Load capacity
	40 Km/h	3700 kg

6AA949.001

Axle	
Drawing №:	6AA949
Brake:	300×60
Brake type:	30-4305
Certification:	361-047-12
Automatic reverse control:	none
Center hole:	Ø220
Type	**VRB37 215**
Article №:	6AA949.001
Brake control:	CAM, N
Status:	-
Greasing nipple:	none
PCD:	275×8

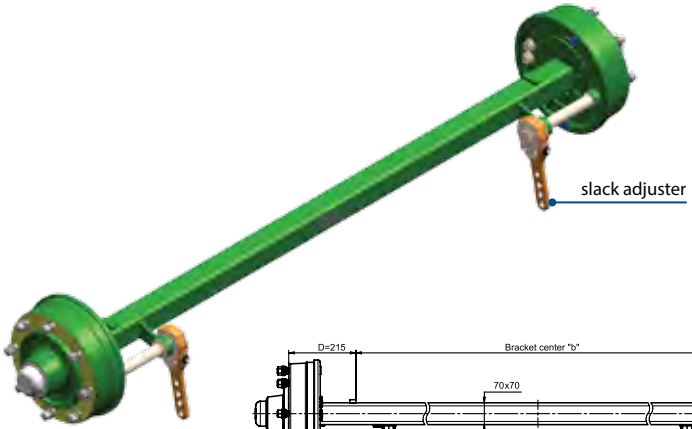

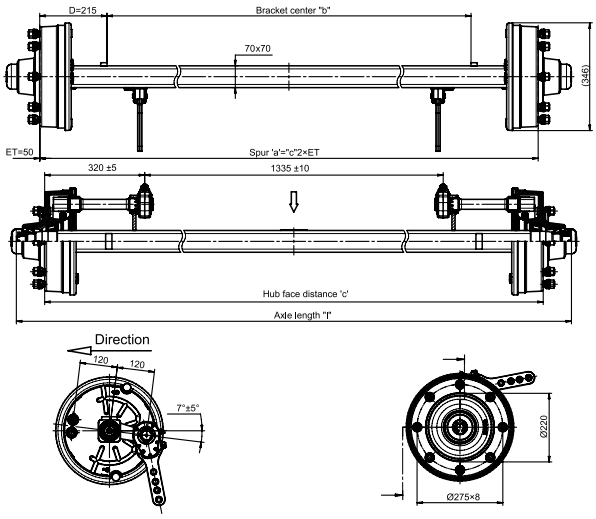

VRB37	Speed	Load capacity
	40 Km/h	3700 kg

WHEEL REFLECTOR

No doubt everyone will agree with the statement that safe behavior on the road is an absolute priority.
To improve the lateral visibility of the trailer we have designed an innovative wheel reflector, which is mounted on to the grease cap of the hub.
This significantly increases the visibility of the trailer to other road users.

We propose the Wheel reflectors to increase road safety:

- easy mounted with a new type of hub cap (see KNOTT Newsletter 19.2016),
- made of reflective foil certificated to ECE R104 Class C,
- ensure the optimum protection of wheel bolts,
- made of durable plastic.

KNOTT AUTÓFLEX-GROUP

www.autoflex.hu

SPIRAL SPRING AXLE

Unbraked axle with spiral spring

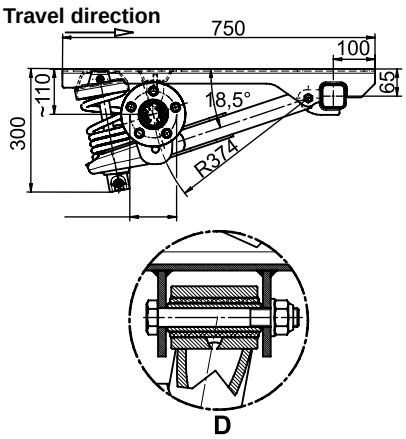

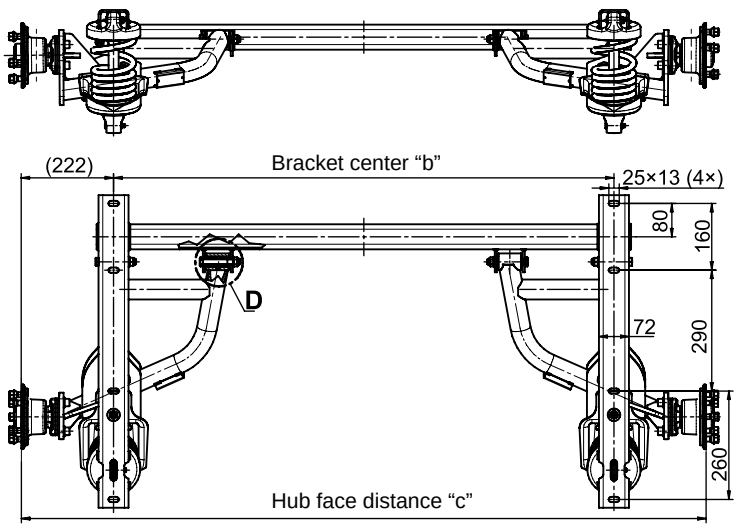

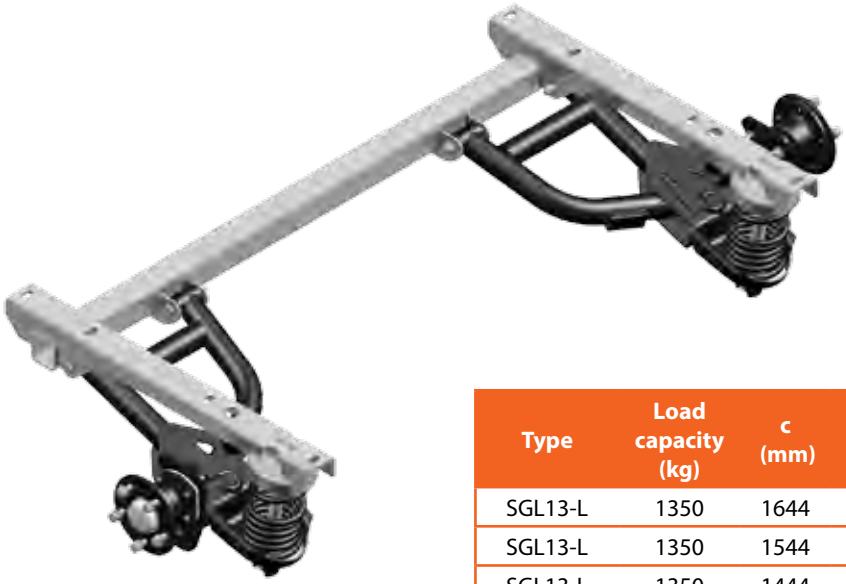

Type	Load capacity (kg)	c (mm)	b (mm)	PCD (mm)	Offset (mm)	Art. nr.
SGL13-L	1350	1644	1200	Ø112×5	26-35	6AB899.001
SGL13-L	1350	1544	1100	Ø112×5	26-35	6AB899.002
SGL13-L	1350	1444	1000	Ø139,7×6	26-35	6AB899.003
SGL13-L	1350	1544	1100	Ø139,7×6	26-35	6AB899.004

For more information please contact our sales personnel!
These axles are available according to inquiry.
More types are available.
Please ask our sales personnel for current drawings!

Braked axle with spiral spring

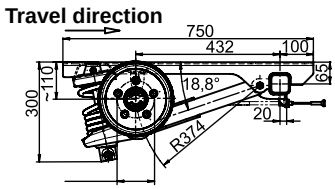

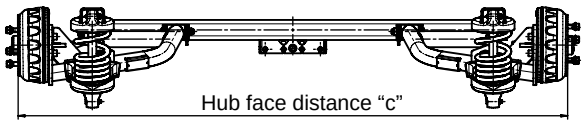

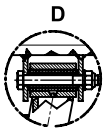

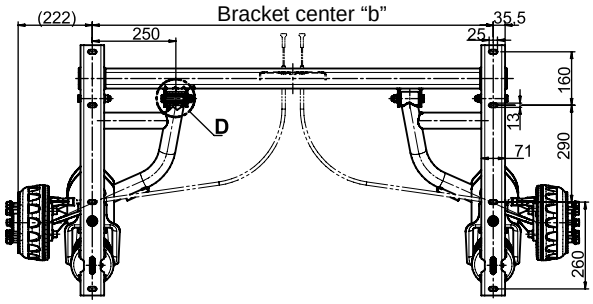

SGB13

SGB15

SGB18

Type	Load capacity (kg)	c (mm)	b (mm)	PCD (mm)	Offset (mm)	Art. number
SGB13-L	1350	1644	1200	Ø112×5	26-35	6AB302.001
SGB15-MV	1500	2146	1670	Ø112×5	0-45	6AC212.001
SGB18-MV	1800	1844	1400	Ø112×5	26-35	6AB612.001

SGB Braked axle with disc brake

Type	Load capacity (kg)	c (mm)	b (mm)	PCD (mm)	Offset (mm)	Art. nr.
SGB18-MV	1800	1876	1400	Ø112×5	25-35	6AE615.001

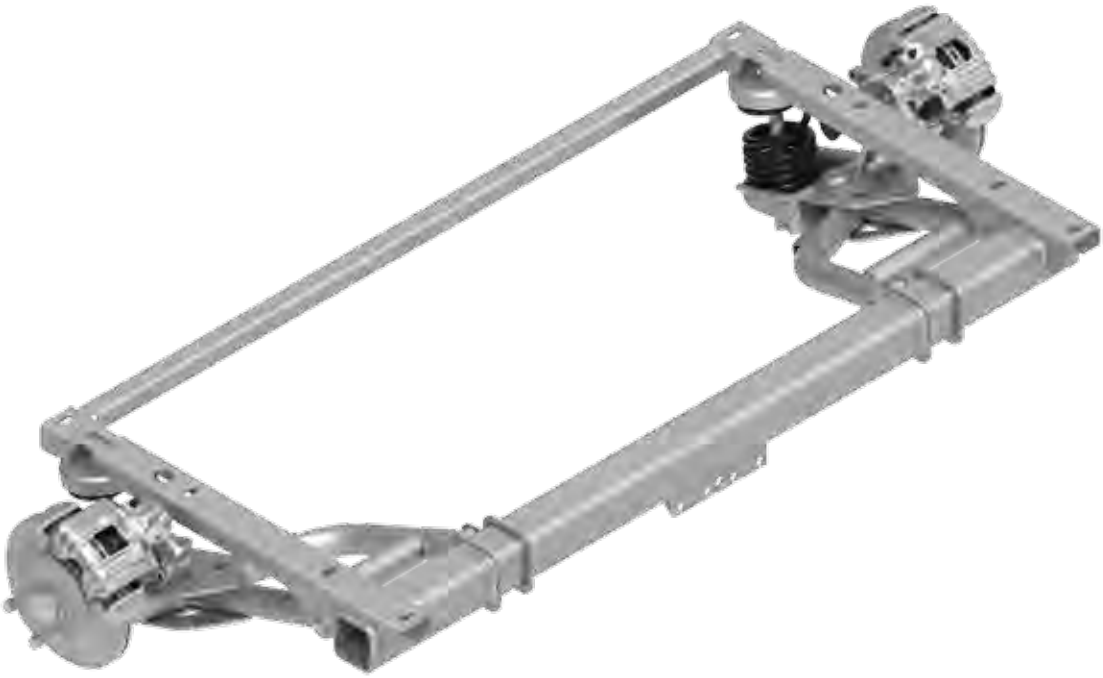

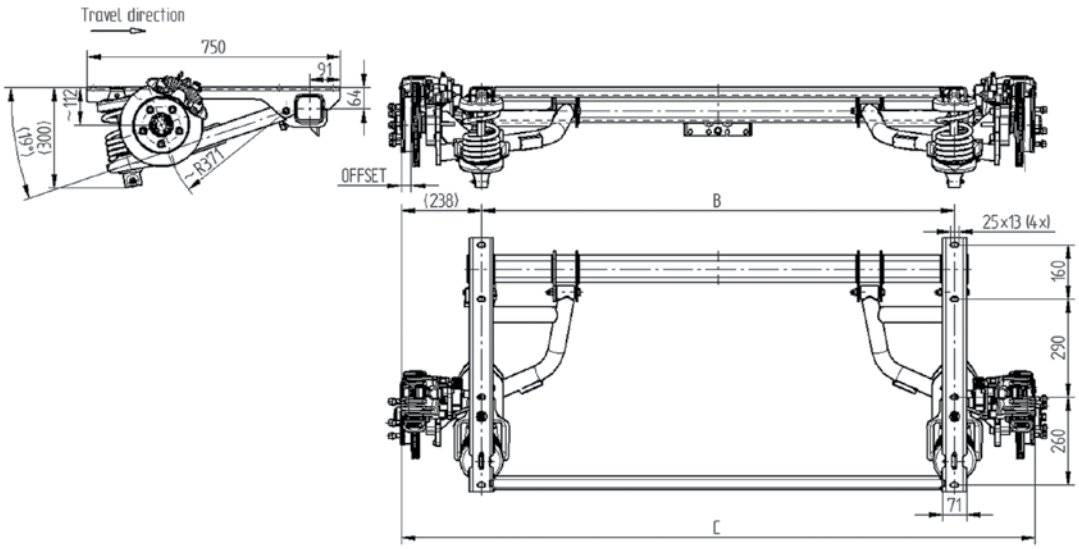

Shock absorber retrofit kit

Type	Art. Nr.
for F200×50 brakes	6BJ424.001
for F250×40 brakes	6BJ423.001

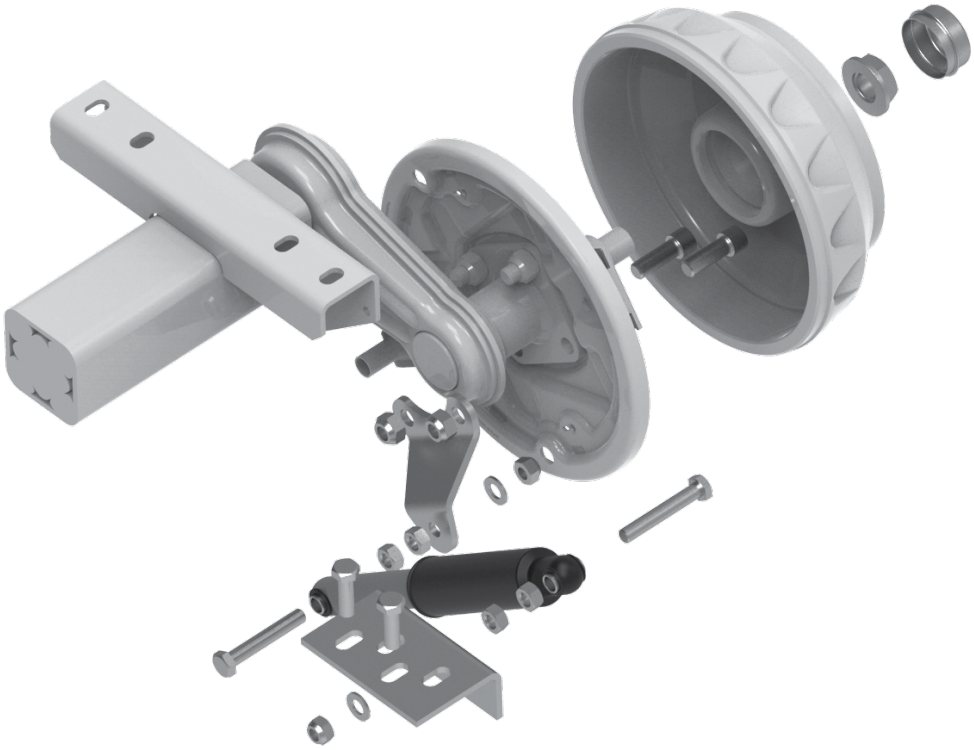

■ Retrofit instruction: SK60019

SHOCK ABSORBERS

- Shock absorbers mounted on the bracket and frame are designed to improve drive comfort by absorbing vibrations from the suspension system.
- Below is the method of mounting to the frame, installation length and maximum allowable stroke of the multi-purpose shock absorber.

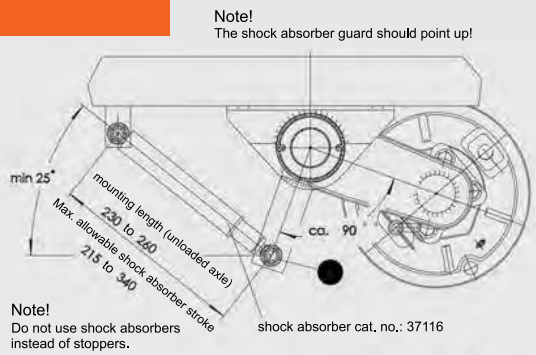

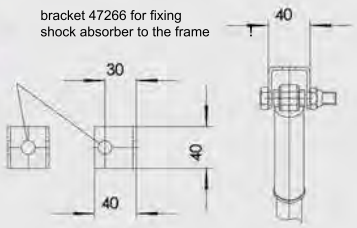

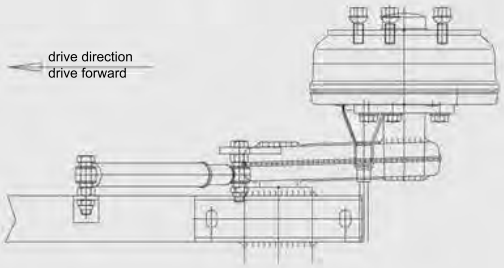

- The shock absorbers available in our product offering come in multi-purpose and pneumatic versions featuring different rigidity, which translates into different driving characteristics.
- Because of their different parameters, our shock absorbers can meet all sorts of customer requirements.
- For optimum performance, shock absorbers should be installed inclined at approximately 25 degrees to the drive direction.
- Standard Knott axles can be easily provided with a bracket to facilitate the installation of shock absorbers.
- As standard, shock absorbers are mounted in front of the axle; however, we also offer "inverted" shock absorbers, on special orders, to be mounted behind the axle.

KNOTT AUTÓFLEX-GROUP

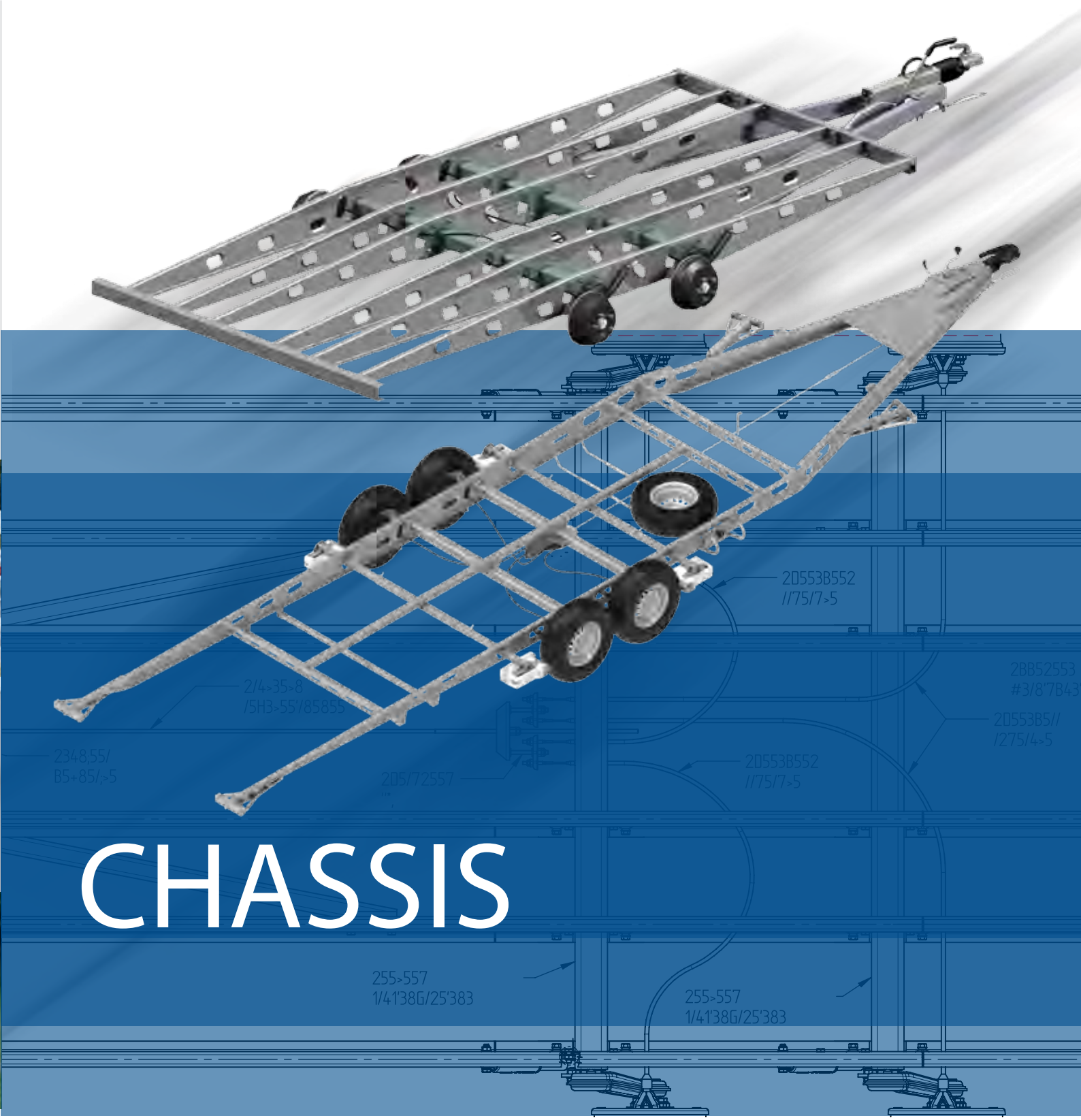
2D553B552
//75/7>5
2/4>35>8
/5H3-55'/858555
2348,55/
B5+85/,>5
2D5/72557
2D553B552
//75/7>5
255>557
1/41'38Б/25'383
255>557
1/41'38Б/25'383

CHASSIS

LIGHT CONSTRUCTIONED SELF-SUPPORTING FRAME

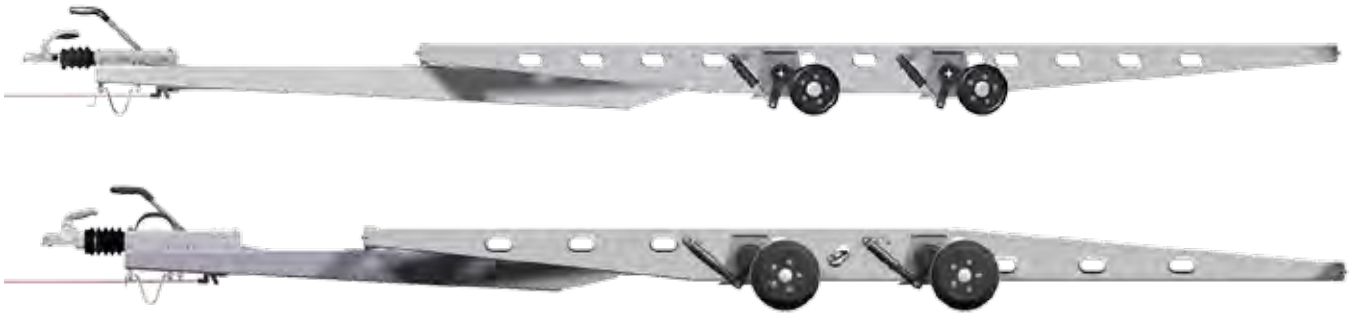

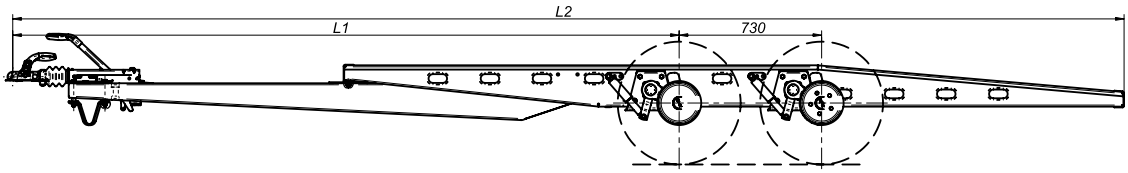

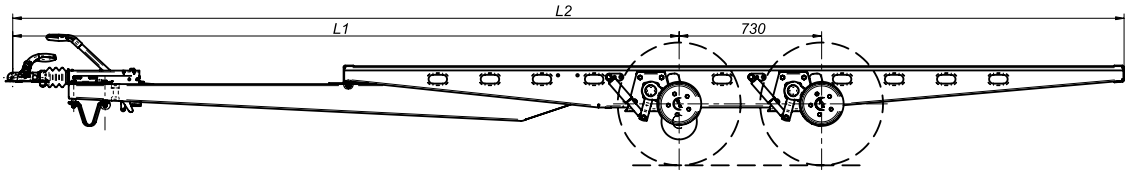

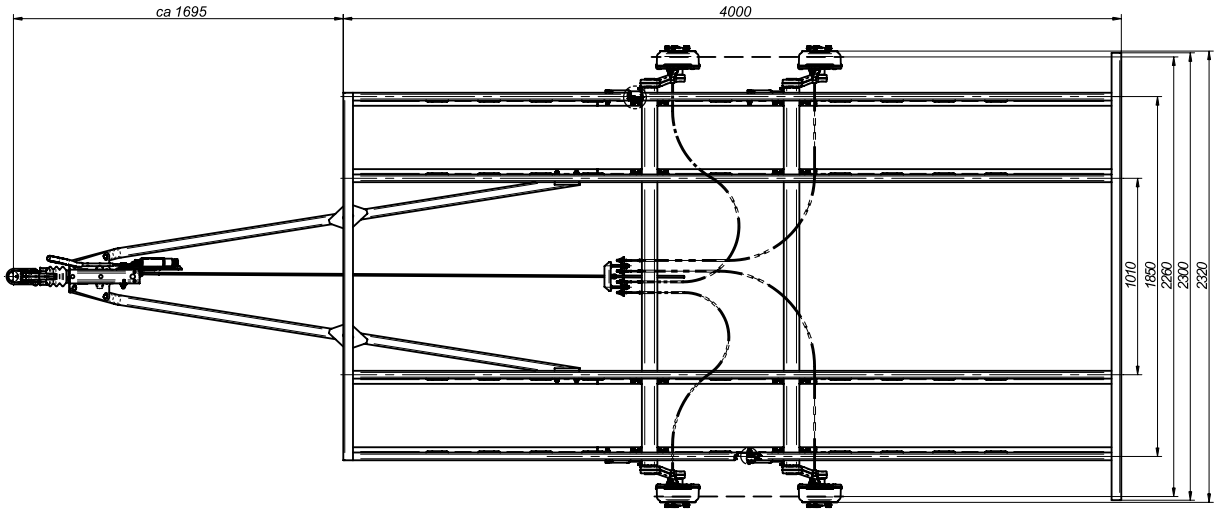

Type	L (mm)	L1 (mm)	L2 (mm)	Own weight (kg)	Vertical load max.(kg)	Art. nr.	Version
UT2000	4000	3415	5695	295	2000	6A6721.001	bolted
UT2700	4000	3415	5695	305	2700	6A6722.001	bolted
UT3500	4000	2990	5270	671	3500	6B3011.001	bolted
AT2000	4000	3415	5695	295	2000	6A6723.001	bolted
AT2700	4000	3415	5695	305	2700	6A6724.001	bolted
AT3500	4000	2990	5270	663	3500	6B2861.001	bolted

Chassis for utility trailers

Load capacity
up to 2700 kg

Chassis for car transporter trailers

Load capacity
up to 3500 kg

Chassis for utility trailers

Load capacity
up to 3500 kg

- Mountable version
- Lightweight design
- Hot-dip galvanised surface
- Mono and tandem version
- Connectable with optional body
- Easy assamblage
- Little storage and carriage requirement
- As demanded mounted with shock-absorber

Chassis for caravans

Load capacity
up to 1500 kg

Chassis for caravans

Load capacity
up to 2000 kg

Chassis for caravans

Load capacity
up to 2700 kg

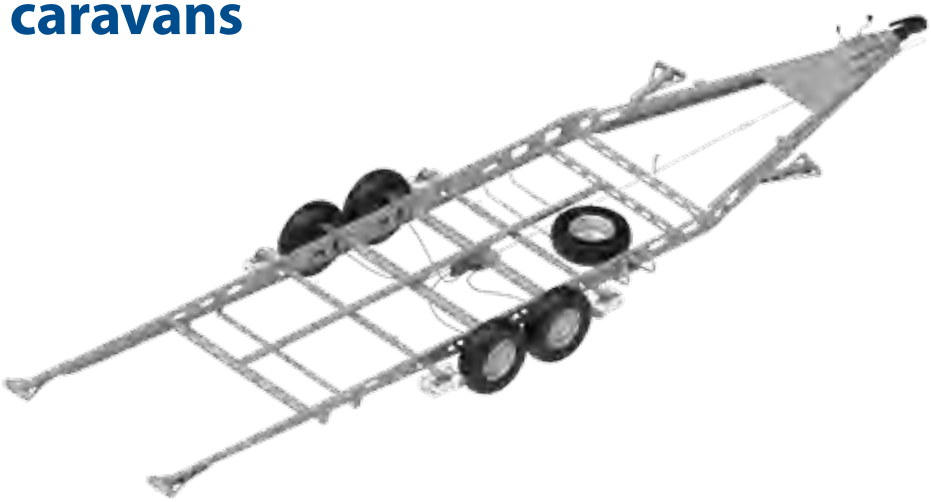

CARAVAN ACCESSORIES

Easy Driver caravan mover

Spare wheel holder for caravans

ETS Plus

Overrun device cover (for KFL20-27 GFV type)

Type	Art. Nr.
	6BC832.001
with accessories	6BC832.800
with accessories	6BC832.900
for ETS LED	6BH903.001
for ETS LED with accessories	6BH915.001

Overrun device cover (for KFL14 GF type)

Type	Art. Nr.
	6BJ077.001
with accessories	6BJ318.800
with accessories	6BJ318.900
for ETS LED	6BJ078.001
for ETS LED with accessories	6BJ320.001

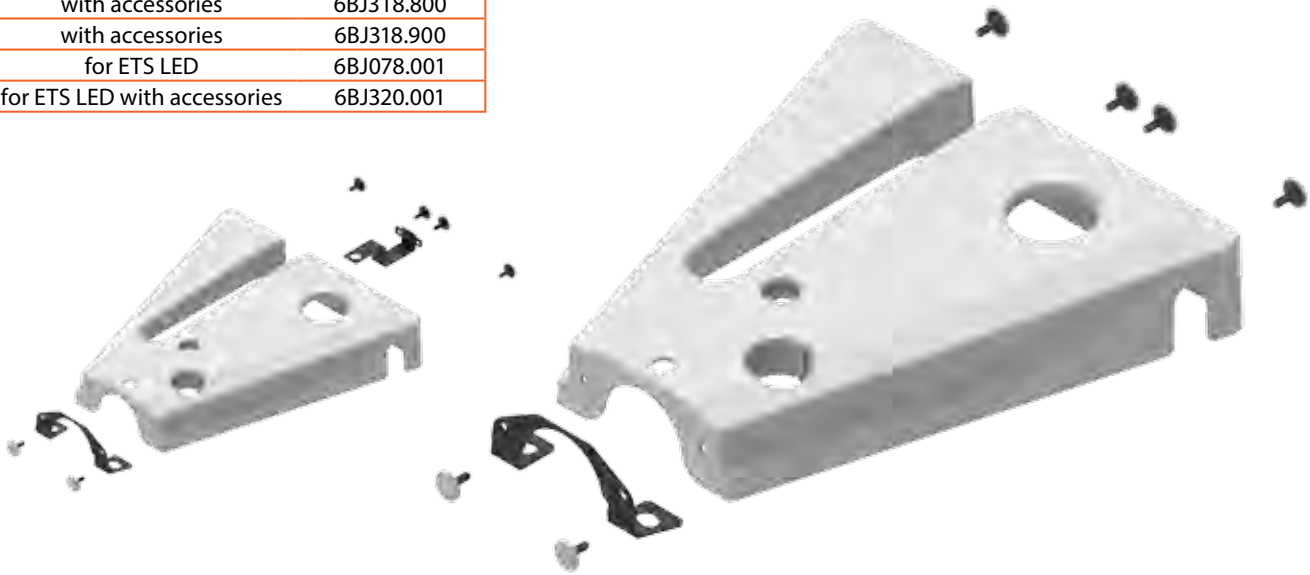

A-frame cover

■ Art. nr.: **6BH084.001**

Overrun device + A-frame cover

■ Art. nr.: **6BC832+6BH084**

Tire control

■ Art. nr.: **210141**

EASYDRIVER

Holidays are wonderful and enjoyable times, with caravanning being one of the best ways to spend them. Unfortunately, the caravan can be very heavy and maneuvering them in a campsite is not easy. To remove the stress and physical strain we introduce innovative devices to aid you positioning your trailer – the easydriver pro and easydriver basic.
The new easydriver caravan mover will help you move your single or double-axle caravan more easily. With our new easydriver pro and easydriver basic caravan moving device, maneuvering even in tight areas, or in situations that require a lot of force, the easydriver makes moving your caravan easy. Soft start facility allows for a gentle pull away, adjusting to maneuver around even the tightest bends. In the caravan park or at home —for a safe grip, even on steep slopes.

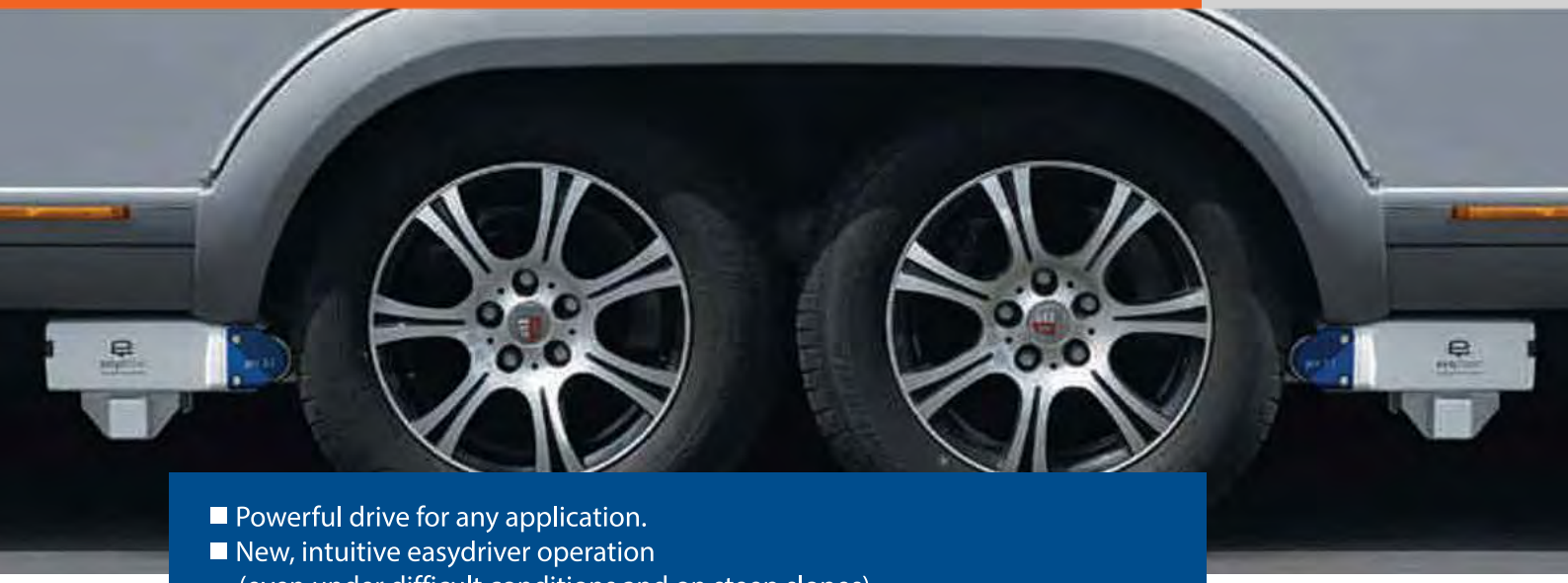

- Powerful drive for any application.
- New, intuitive easydriver operation (even under difficult conditions and on steep slopes).
- Simply light, smart and compact.
- Lowest system weight with MPP (in combination with the Mobility Power Pack lithium/ion system upto 27 kg less weight).
- Very small turning radius.
- Engages electrically at the press of a button (with the easydriver pro).
- Unique engaging mechanism for optimal power transfer.
- Radio remote control for all functions with status feedback.
- Best traction for safe negotiation of slopes, wet grass, mud and rough terrain.
- Gentle pulling away and stopping with Softstart and Softstop.

www.autoflex.hu

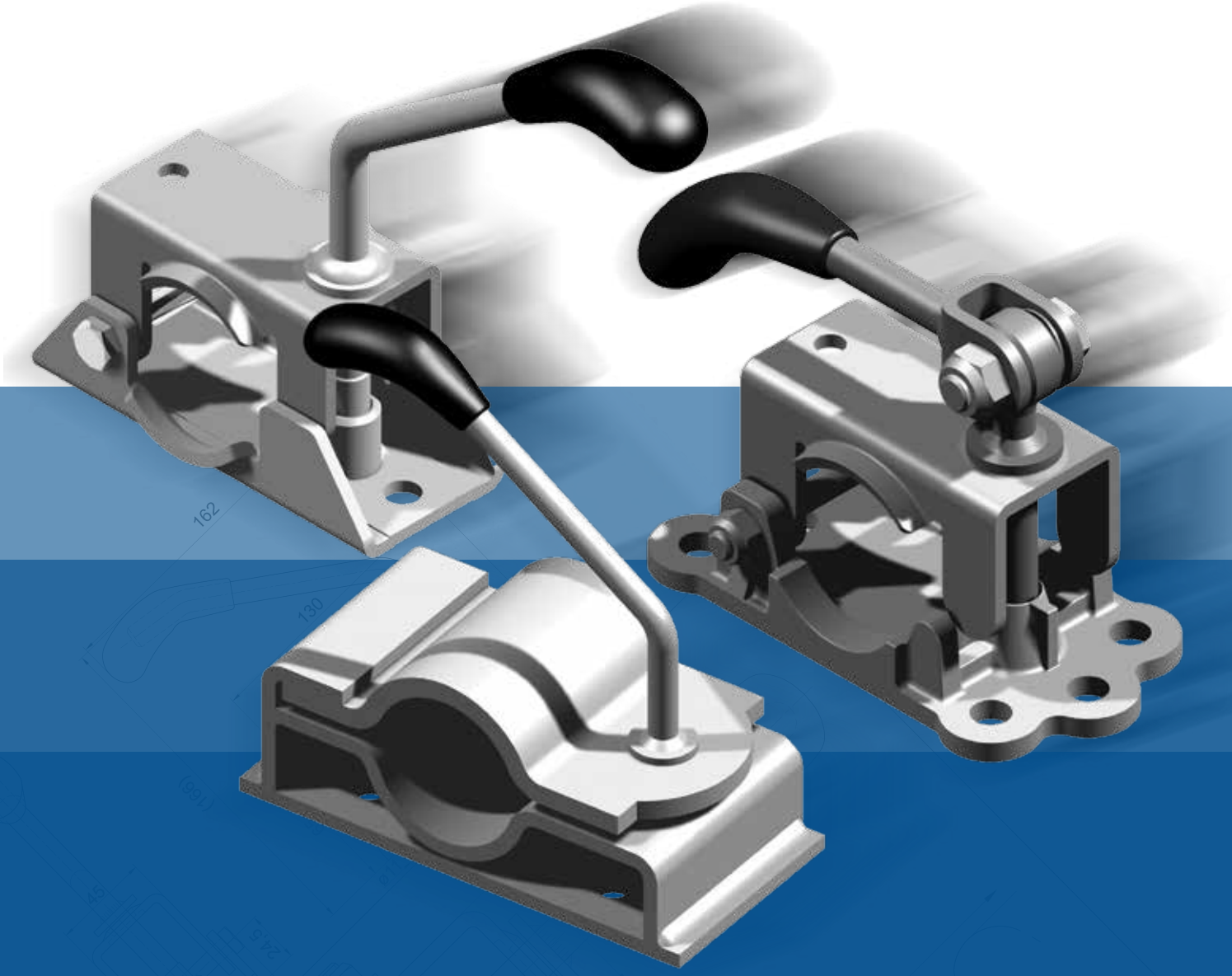

CLAMP

JOCKEY WHEEL CLAMP

LB 35

Type	Load capacity kg (max.)	Art. nr.
LB 35	75	6F0036.001

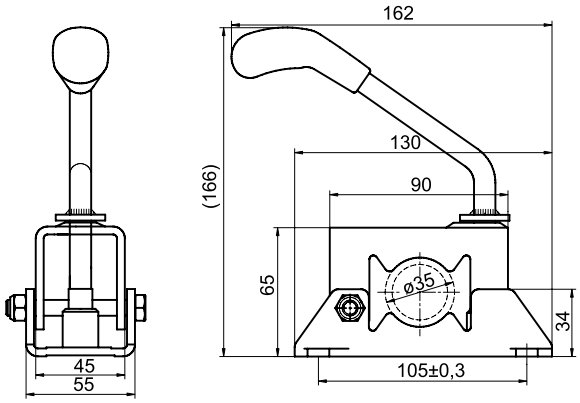

LB 42

Type	Load capacity kg (max.)	Art. nr.
LB 42	125	6F5151.001

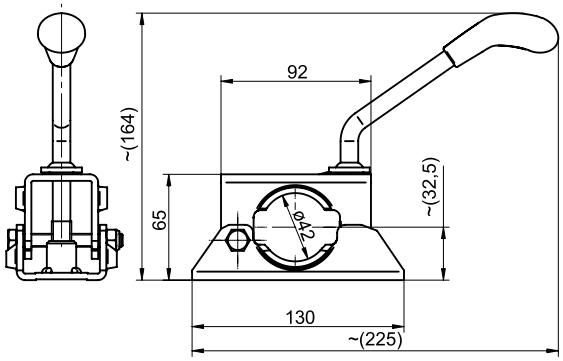

LB 48

Type	Load capacity kg (max.)	Art. nr.
LB 48	200	6X1097.001
LB 48	200	6X1097.103

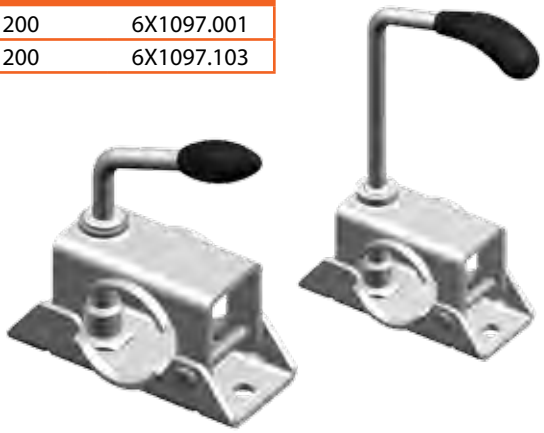

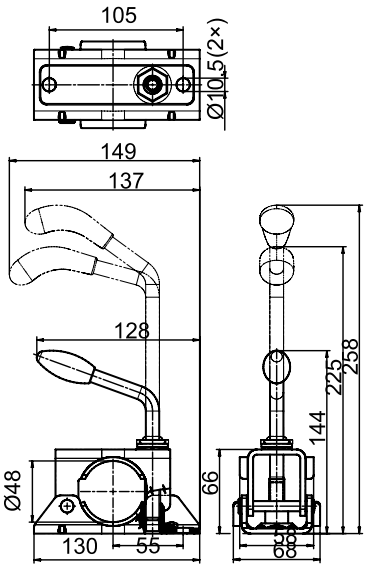

LB 48

Type	Load capacity kg (max.)	Art. nr.
LB 48	200	6F0081.001

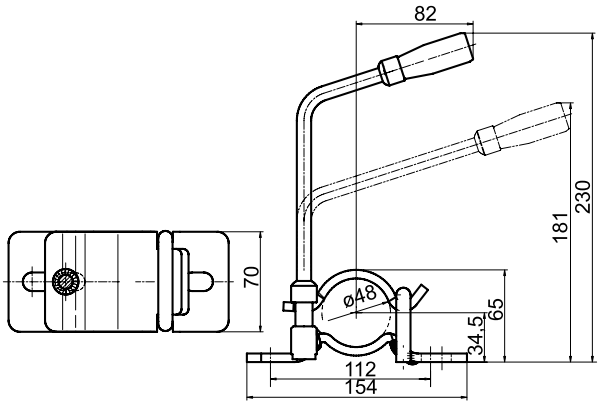

LBG 48

Type	Load capacity kg (max.)	Art. nr.
LBG 48	250	6F5121.001

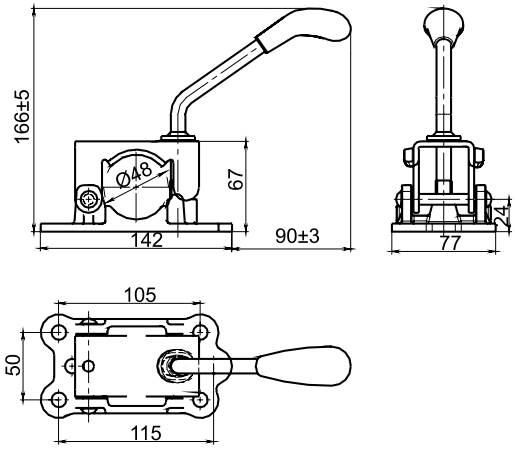

LBG 48

Type	Load capacity kg (max.)	Art. nr.
LB 48	200	6F5013.001

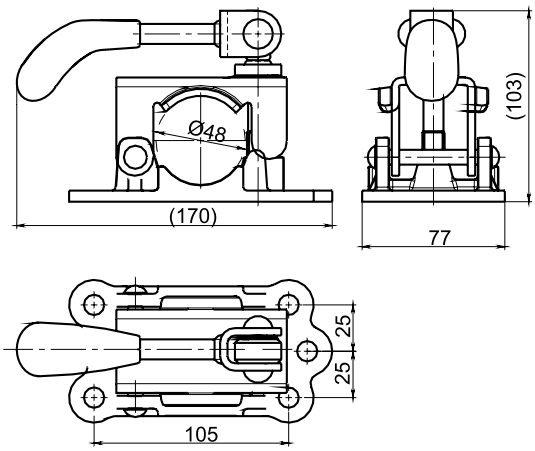

JOCKEY WHEEL CLAMP

LB 60

Type	Load capacity kg (max.)	Art. nr.
LB 60	280	6F0109.001

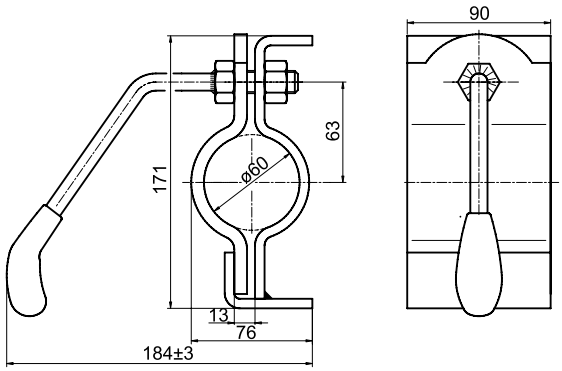

LB 60 T1

Type	Load capacity kg (max.)	Art. nr.
LB 60 T1	280	6F5047.001

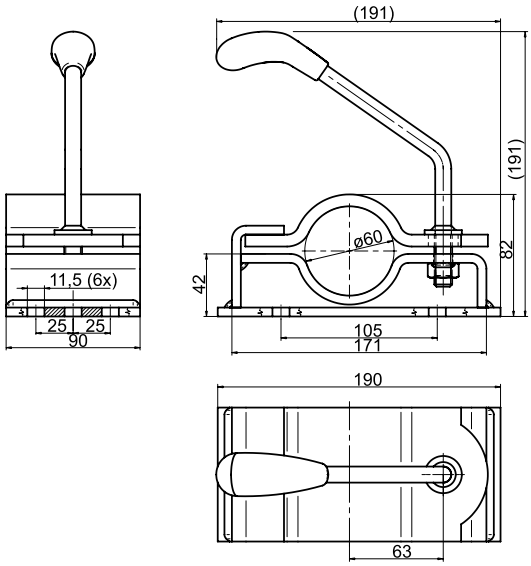

LB 60 T2

Type	Load capacity kg(max.)	Art. nr.
LB 60 T2	280	6F0010.001

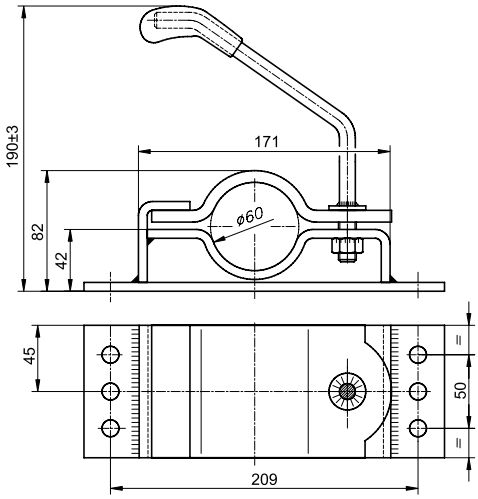

KLE 60

Type	Load capacity kg (max.)	Art. nr.
KLE 60	250	6F0095.001

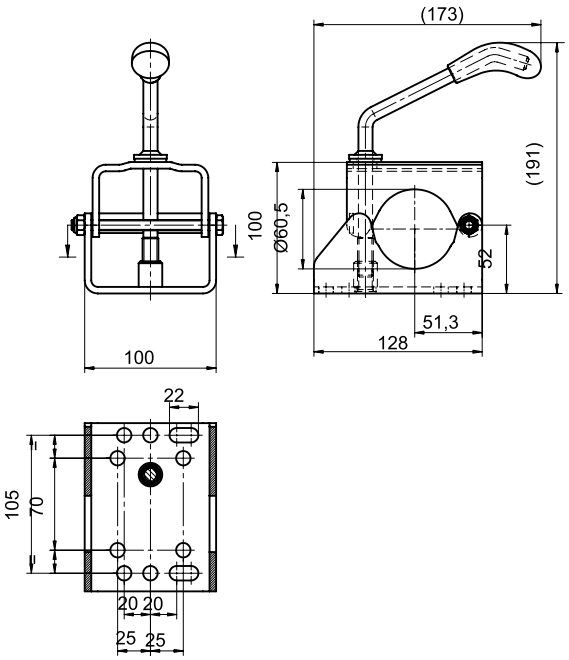

LB H 48 Jockey wheel clamp for corded tube

Type	Load capacity kg (max.)	Art. nr.
LB H 48	350	6F5052.001

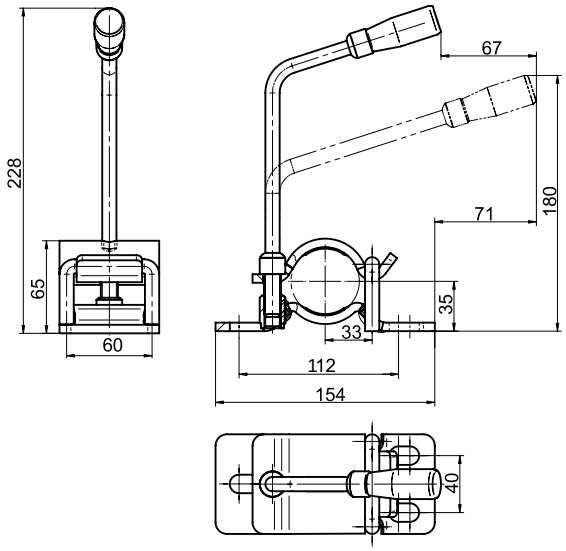

KNOTT
AUTÓFLEX KFT.

Protect your valuables when traveling!

Leaving for a long trip with large and valuable packages that don't fit in the car?

Perhaps you would like to bring extra vehicles with you?
With the Hard Top trailer cover's unlimited parameters almost any kind of load can be safely transported, be it large boxes, bicyles, motorcyle, jet ski, even a snowmobile!
Made of solid plastic and being available also in custom sizes, the Hard Top trailer cover is the safest transportation tool. Easily manageable, sealable and resistant to any weather and all kinds of environmental impacts.
Take it with you!

Safety goes with us

Nearly anything can be transported or stored safely in the Hard Top, even while you are camping out there.

Strong and resistant even when it's raining cats and dogs.
It is an easy decision,
have the Hard Top by your side!

www.autoflex.hu

There is no trailer without us!

PROP STAND AND JOCKEY WHEEL

JOCKEY WHEEL AND PROP STAND

The product can be used:
- for stabilizing the trailer nose
- as a stay-bar for trailers
- with jockey wheel to move the trailer easily

Surface treatment:
- hot-dip galvanization
- galvanization

Vertical load capacity:
- 50 to 1500 kg

Advantages of the product:
- low maintenance cost
- swing-away option for comfortable and safe use
- the wheel is provided with needle roller or sliding bearing
- steel plate driving level with bearing and a d=5 mm pin
- automatic or fixed jockey wheel
- rotable up to 90°
- universal crank

Operation of the swing-away swivel jack

Operating the swing-away swivel jack

Thanks to the swing-away swivel, traveling with jockey wheel and prop stand (jack) is safer. Before traveling with your trailer put the jack into horizontal position. This way the wheel is not able to touch the ground that prevents fraying. When the vehicle is not moving put the jack into vertical position.

In both vertical and horizontal positions, the plunger must be securely positioned in the mating hole of the mounting bracket.

Operating instructions of the swing-away swivel:

1. Secure the trailer
2. Pull the plunger pin (U-bolt) out of the opening
3. Swivel the jack
4. Rotate either left or right until the plunger pin snaps properly into the hole of the mounting bracket

For further information about the Autoflex jockey wheel assembly and operating instructions please ask our contact personnel.

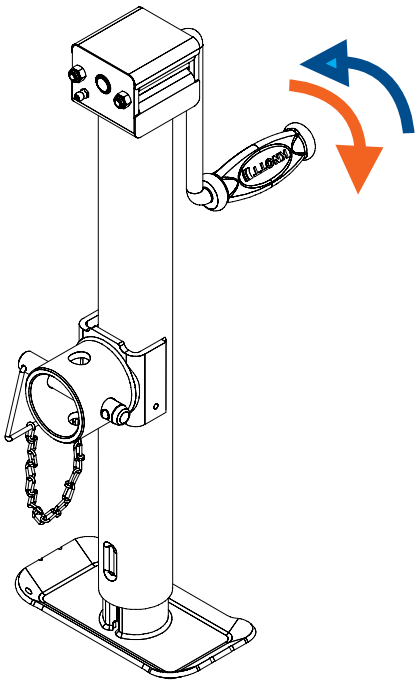

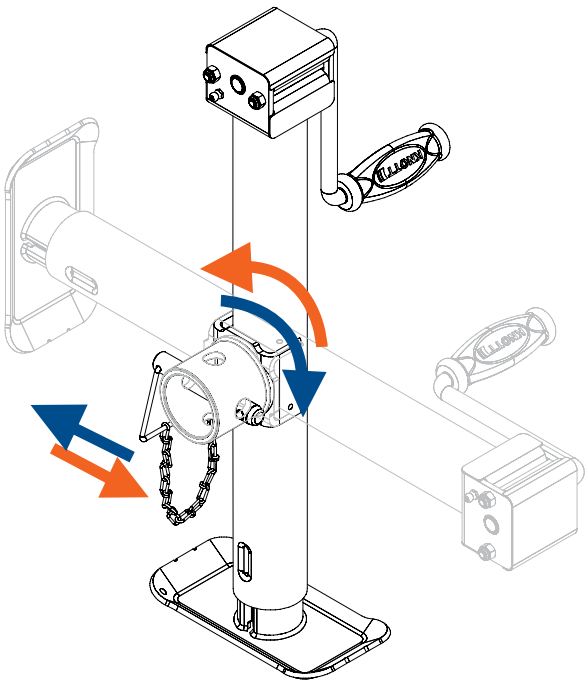

PROP STAND

1

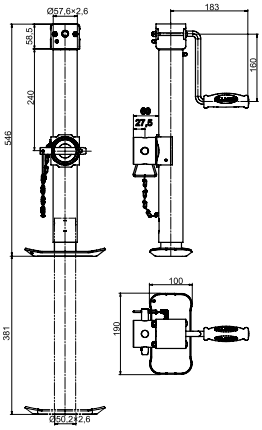

2

4

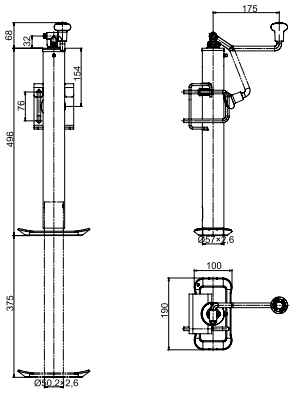

3

5

Mounting tube
6D8080.001

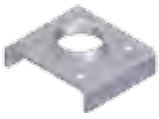

Mounting bracket
6D7986.001

■ For these prop stands the mounting bracket and the tube must be ordered separately!

№	Model	Vertical load (max.)	Note	Art. nr.
1	TTL 57	900 kg	Hot-dip galvanized + KTL + powder coated	6D7917.001
2	TTL 57	900 kg	Hot-dip galvanized + KTL + powder coated	6D7907.001
3	TTL 57	900 kg	Hot-dip galvanized + KTL + powder coated	6D7931.001
4	TTL 57	900 kg	Hot-dip galvanized + KTL + powder coated	6D7975.001
5	TTL 48	900 kg	Hot-dip galvanized + KTL + powder coated	6D8443.001

SWING-AWAY SWIVEL JACK

1

2

3

4

5

6

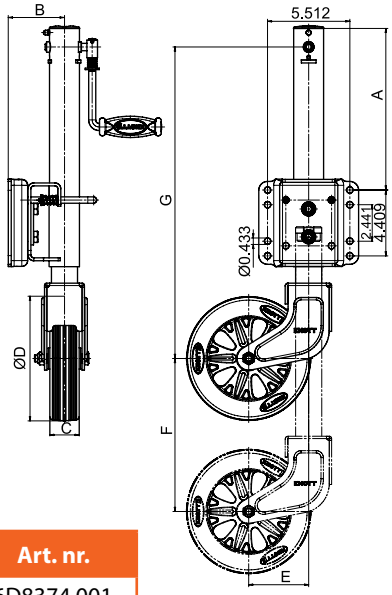

№	Model	Load capacity	Lifting height	Handle	Art. nr.
1.	TK48-150/47M	500 kg	215 mm	sidewind	6D8374.001
2.	TK48-150/47M	500 kg	211 mm	top	6D8224.001
3.	TK51-210/50M	500 kg	254 mm	sidewind	6D7983.001
4.	TK57-210/50M	500 kg	200 mm	sidewind	6D8116.001
5.	TK57-210/50M	500 kg	255 mm	sidewind	6D8168.001
6.	TK57-210/75M	550 kg	300 mm	sidewind	6D7706.001

Size (mm)	6D8374	6D8224	6D7983	6D8116	6D8168	6D7706
A	274	166,5	275	200	277,5	322
B	122,5	86	95	91	90	99
C	47	47	50	50	50	75
ØD	153	153	210	212	212	210
E	52	52	102	102	102	102
F	216	211	254	200	255	300
G	467	447	530	443	506	570

PROP STAND

TL 48

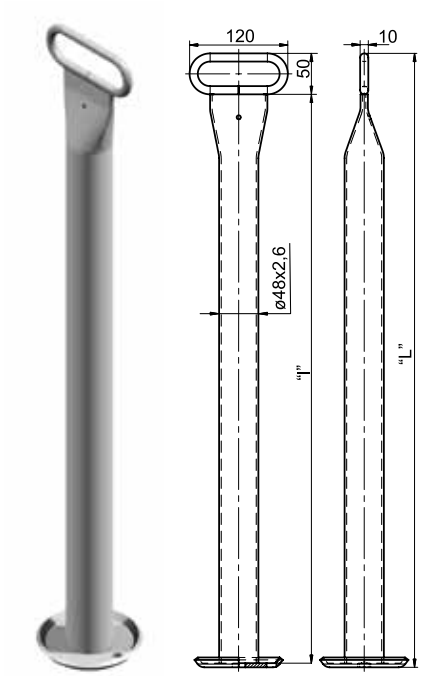

L (mm)	l (mm)	Surface treatment	Art. nr.
590	535	FeZn12	6D5749.001
590	535	hot-dip galvanized	6D5749.002
710	655	FeZn12	6D5749.003
710	655	hot-dip galvanized	6D5749.004
900	845	FeZn12	6D5749.005
900	845	hot-dip galvanized	6D5749.006
550	495	FeZn12	6D5749.007
550	495	hot-dip galvanized	6D5749.008
650	595	FeZn12	6D5749.009
650	595	hot-dip galvanized	6D5749.010
750	695	FeZn12	6D5749.011
750	695	hot-dip galvanized	6D5749.012
850	795	FeZn12	6D5749.013
850	795	hot-dip galvanized	6D5749.014

TL 48H

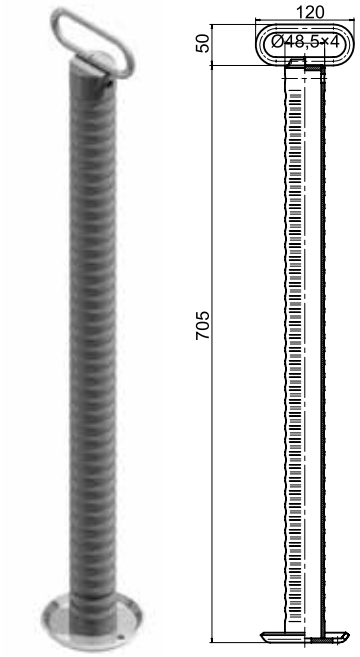

Model	Vertical load kg (max.)	Note	Art. nr.
TL 48H	280	locking with clamp	6D6585.001

TTL 42 Telescopic prop stand

Model	Vertical load kg (max.)	Note	Art. nr.
TTL 42	250	locking with clamp	6D5981.001

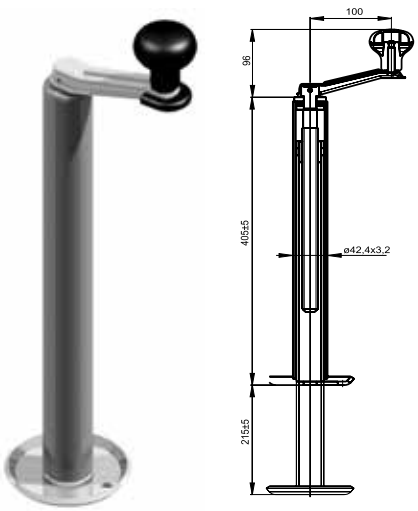

HEAVY DUTY TELESCOPIC PROP STAND

Model	Vertical load (max.)	Note	Art. nr.
TTLS 70	1000 kg	fixation with bolt	6D6334.001
TTL 80	1500 kg	fixation with bolt	6D6888.001
TTL 205×120	1500 kg	fixation with bolt	6D7877.001

TTLS 70

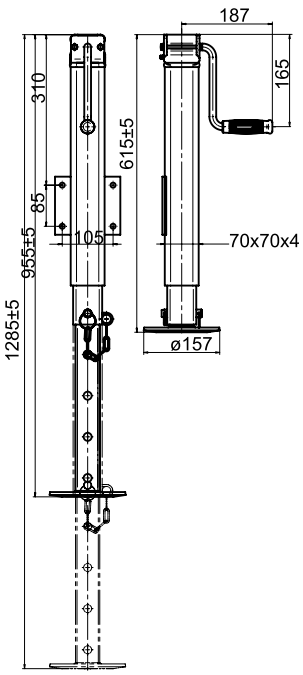

TTL 205×120

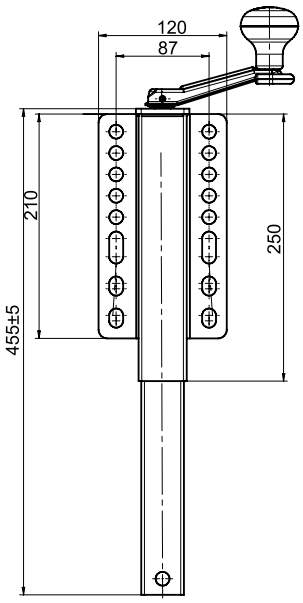

TTL 80

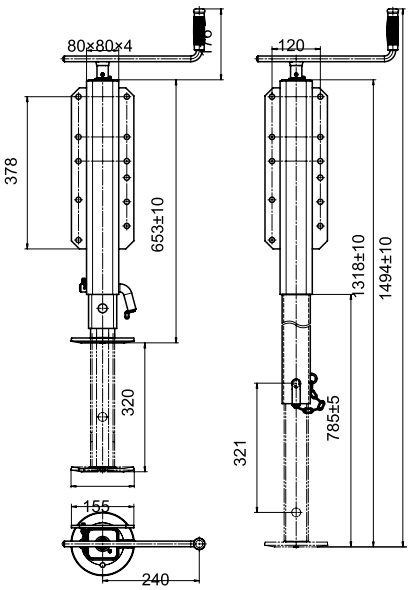

RETRACTABLE JOCKEY WHEEL FOR TRAILERS AND CARAVANS

Type	Vertical load (max.)	Wheel material	Wheel size	Art. nr.
ATK 60-205/50 AC	150 kg	solid rubber + sheet metal rim + slide bearing	205×50	6D5093.001
ATKS 60-205/50 AC	150 kg	solid rubber + sheet metal rim + slide bearing	205×50	6D5538.001

ATK 60-205/50 AC

Round

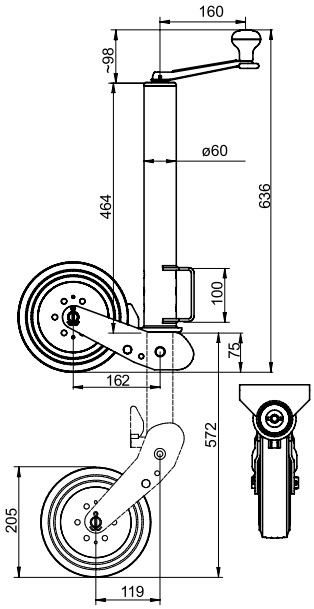

ATKS 60-205/50 AC

Square

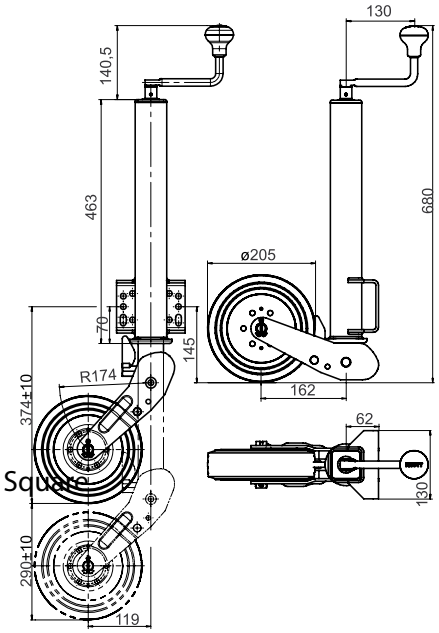

Let us introduce the European Jockey wheel

TK48

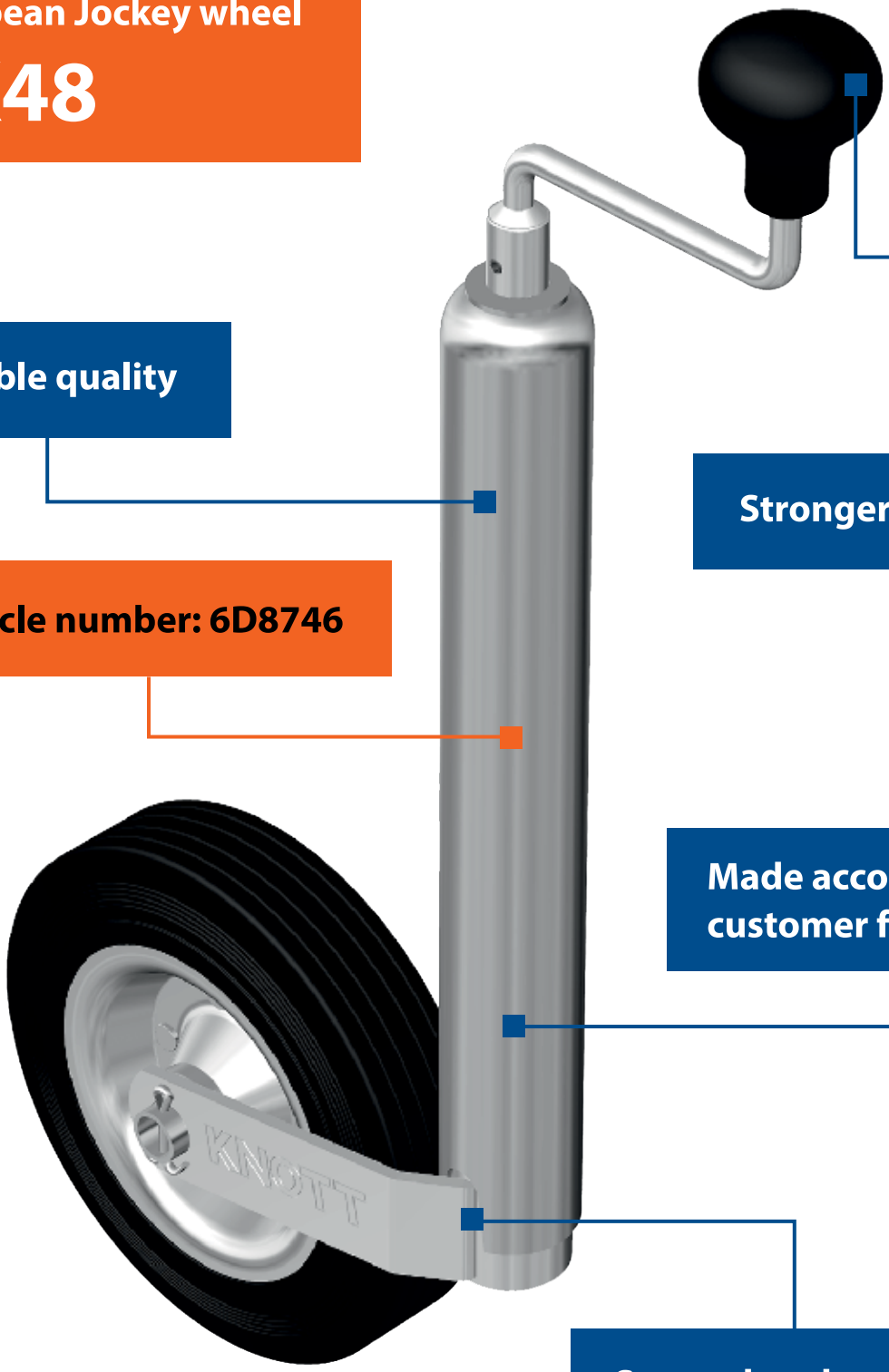

Stable quality

Stronger handler

Article number: 6D8746

Made according customer feedbacks!

Strengthend construction

KNOTT AUTÓFLEX-GROUP

Retractable jockey wheel for trailers and caravans

ATK 60-220/70 AC

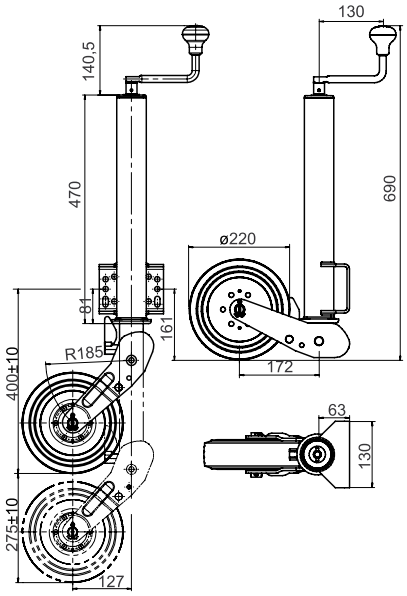

Type	Vertical load (max.)	Wheel material	Wheel size	Art. nr.
ATK60-220/70 AC	150 kg	solid rubber + sheet metal rim + needle bearing	220×70	6D5345.001
ATK60S-220/70 AC	250 kg	solid rubber + sheet metal rim + needle bearing	220×70	6D8539.001
ATK60S-210/75 AC	500 kg	solid rubber + sheet metal rim + needle bearing	210×75	6D8499.001
ATK60S-210/75 M	500 kg	solid rubber + sheet metal rim + needle bearing	210×75	6D7933.001

Automatic jockey wheel with safety function

ATKS 60-220/70 AC

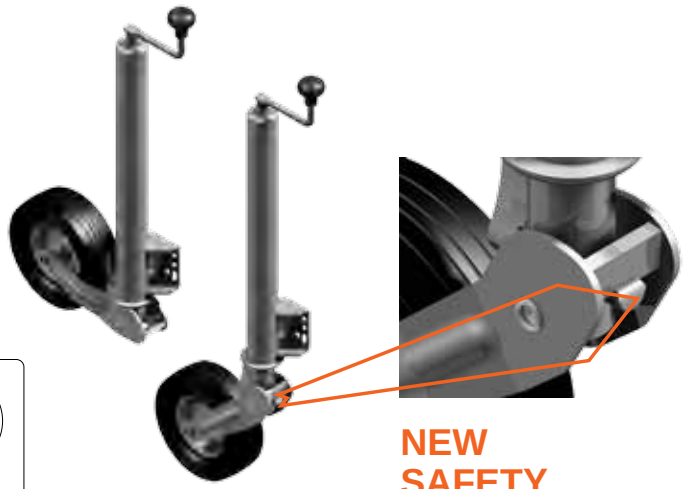

DGUV Test
VL 12014
Sicherheit geprüft
tested safety

NEW SAFETY SOLUTION!

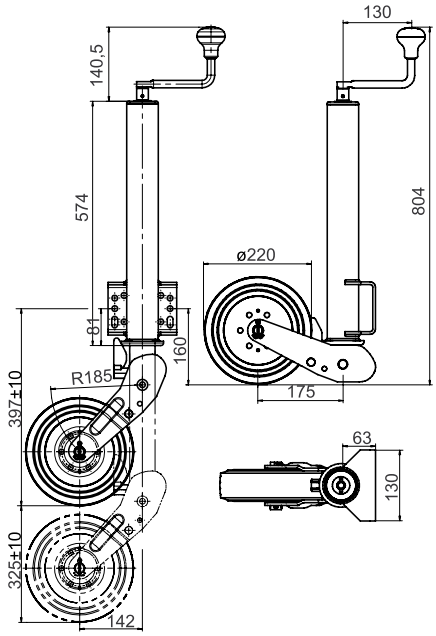

- ATK60S jockey wheel supports any type of drawbar for mono or tandem trailer with max. of 3500 kg load capacity.
- Through an innovative design this jockey wheel prevents accidental collapse of the swing arm thus avoiding risk of injury.
- The swing arm can be folded only in unloaded state.

Operation- and maintenance instructions ATK60S Safety-automatic-jockey wheel

Connecting the trailer

The jockey wheel must face the rear of the trailer Lower the drawbar by reeling in the jockey wheel until the ball coupling rests on the vehicle towing ball, until it locks up or is set at hitch height.

NOTES:

The safety automatic jockey wheel ATK60S can only be wound in completely when it is in an unloaded state, i.e. when in fully coupled condition.

If the folding mechanism is blocked by the incomplete unloading of the drawbar, it must not be cranked down violently.

The wheel must not touch the brake linkage otherwise it could impair the system operation.

- Crank up the jockey wheel completely until the wheel locks
- Tighten the crank to secure wheel, preventing accidental operation.

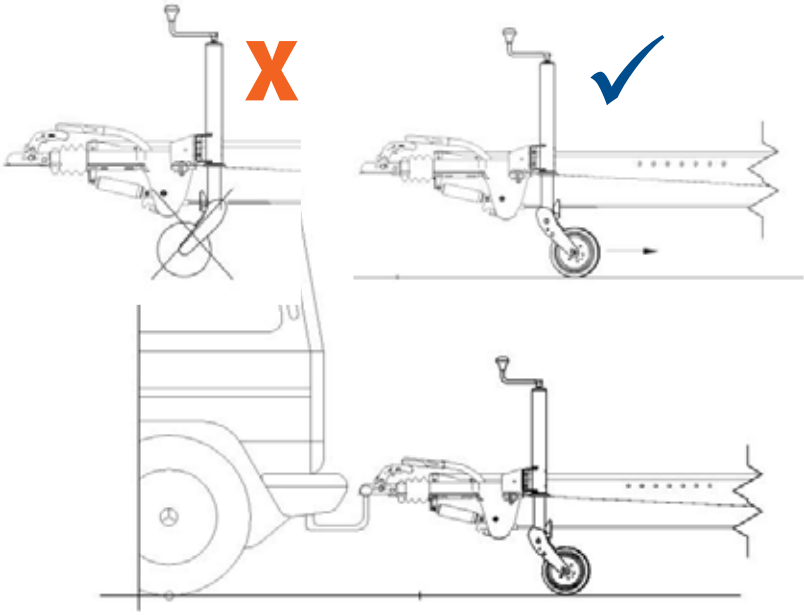

Defining the lifting capacity

Defining the lifting capacity is sufficient before installing the selected Jockey wheel.

The lifting capacity must be sufficient for the application.

The required lifting capacity must be calculated as follows:

$$\text{Lifting capacity} = \frac{(x + y) \times S}{X}$$

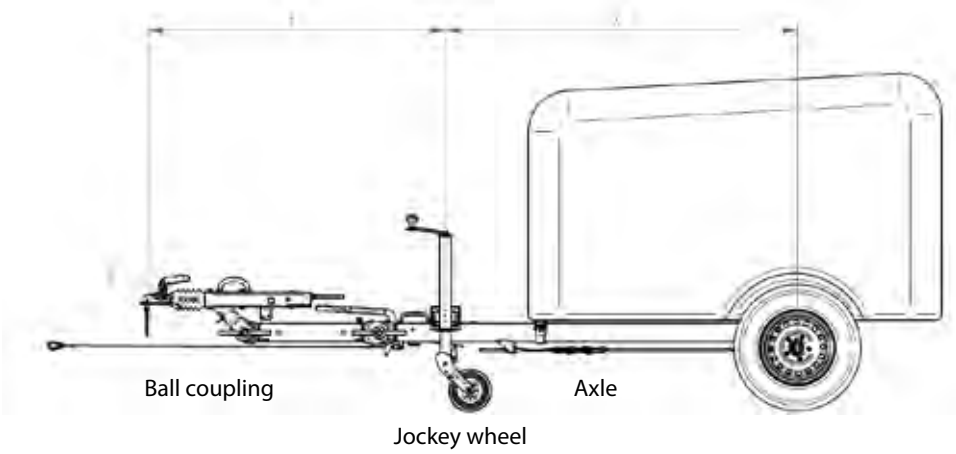

S: load
x: distance jockey wheel - axle
y: distance ball coupling - jockey wheel
S: maximum permitted static load on the coupling point

Cross member package for universal jockey wheel

Drilling template

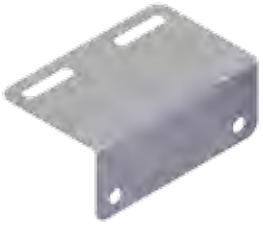

209213.001

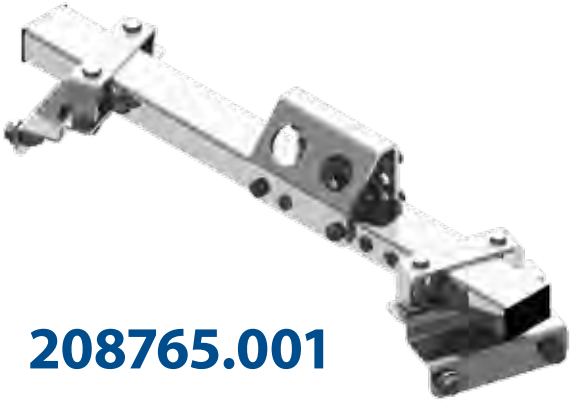

208765.001

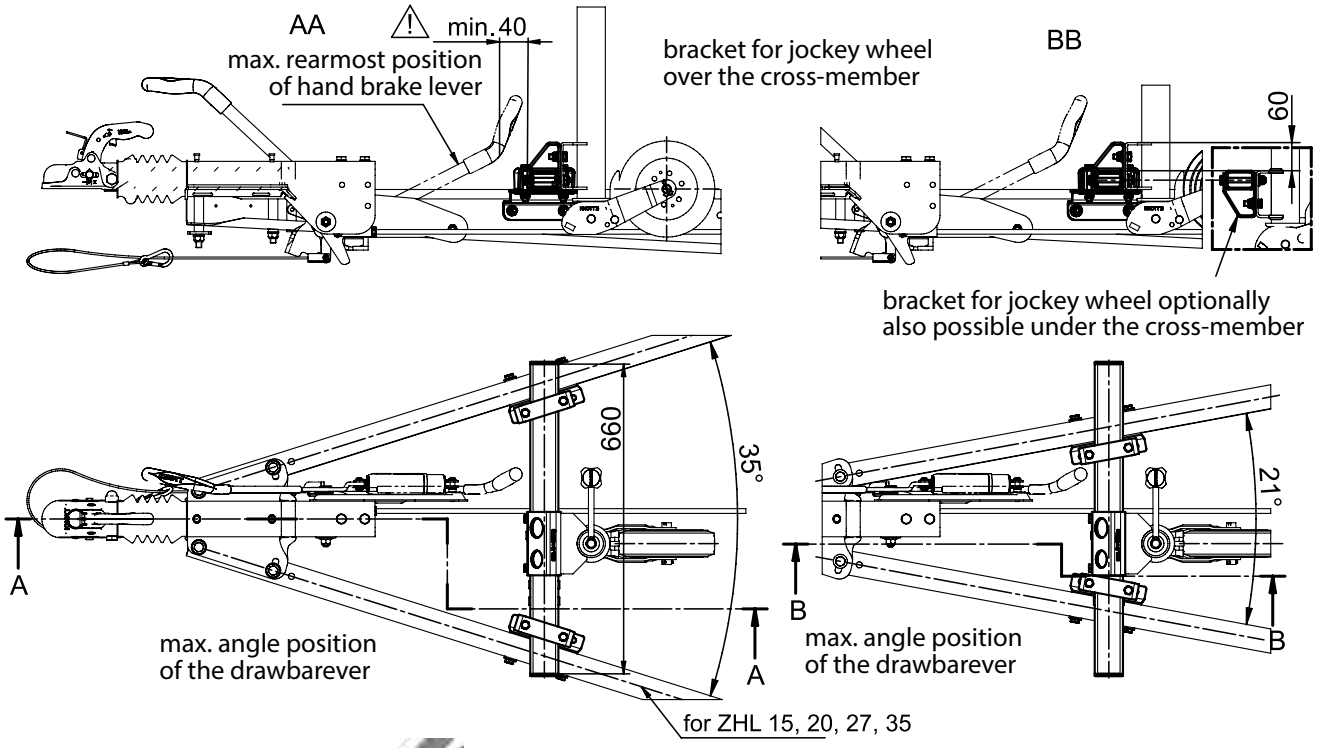

TELESCOPIC JOCKEY WHEELS FOR TRAILERS AND CARAVANS

TK 35

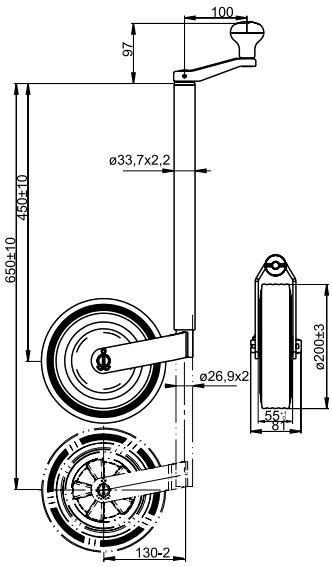

TK 42

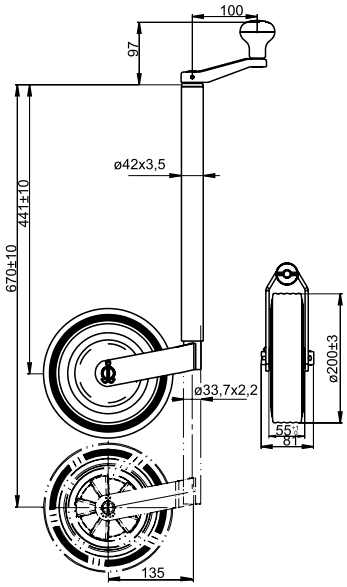

TK 48

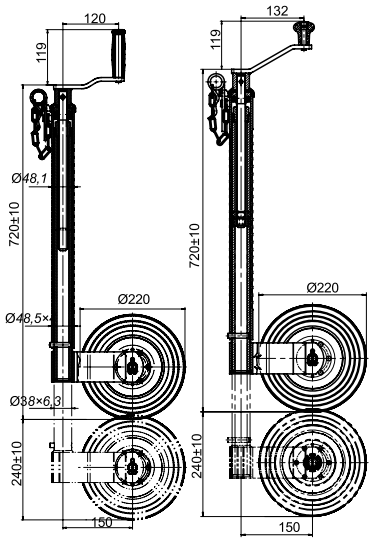

Type	Vertical load (max. kg)	Wheel material	Wheel size	Art. nr.
TK35-200/40 M	75	solid rubber + plastic rim + slide bearing	200×40	6D5757.002
TK35-200/40 AC	75	solid rubber + sheet metal rim + slide bearing	200×40	6D5758.002
TK42-200/40 M	100	solid rubber + plastic rim + slide bearing	200×40	6D5802.001
TK42-200/40 AC	100	solid rubber + sheet metal rim + slide bearing	200×40	6D5800.001
TK48-220/70 H AC	300	solid rubber + sheet metal rim + needle bearing	220×70	6D5949.002
TK48-220/70 H/AC	350	solid rubber + sheet metal rim + needle bearing	220×70	6D6146.001

TK 48-200/50 AC

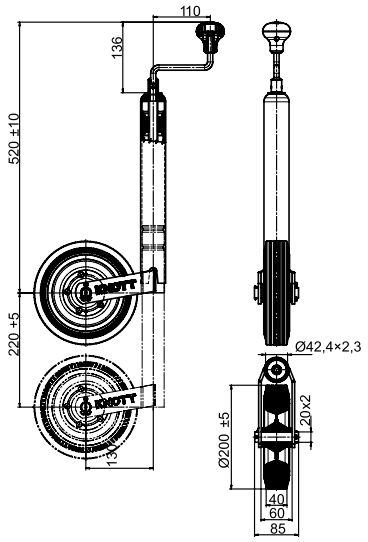

TK 48-210/50 M

NEW!

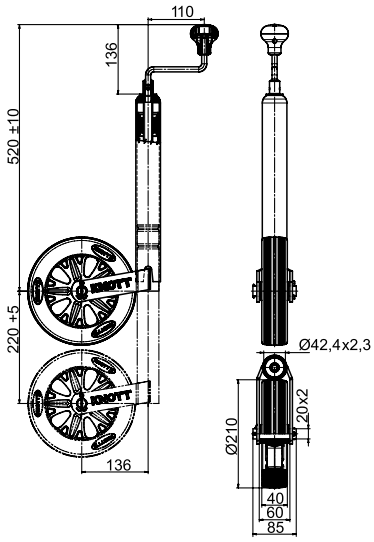

TK 48-200/50 AC

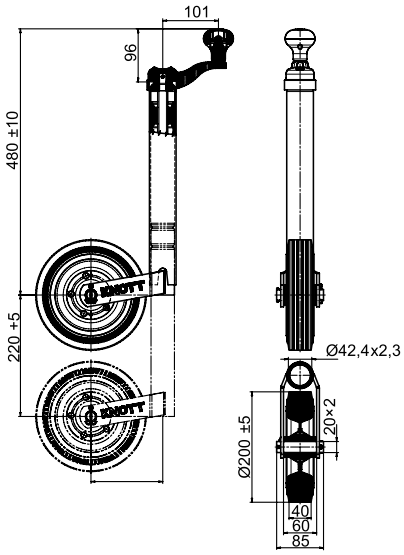

Type	Vertical load (max. kg)	Wheel material	Wheel size	Art. nr.
TK48-200/50 AC	150	solid rubber + sheet metal rim + slide bearing	200×50	6D8746.001
TK48-210/50 M	150	solid rubber + plastic rim + slide bearing	210×50	6D8819.001
TK48-200/50 AC	150	solid rubber + sheet metal rim + slide bearing	200×50	6D8823.001

TELESCOPIC JOCKEY WHEELS FOR TRAILERS AND CARAVANS

TK 48-200/40

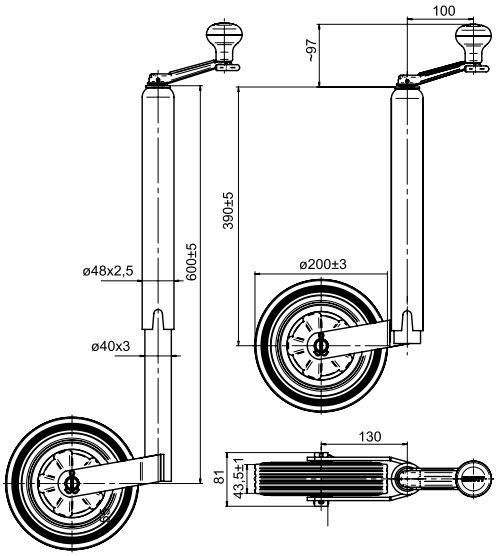

TK 48-200/40 AC

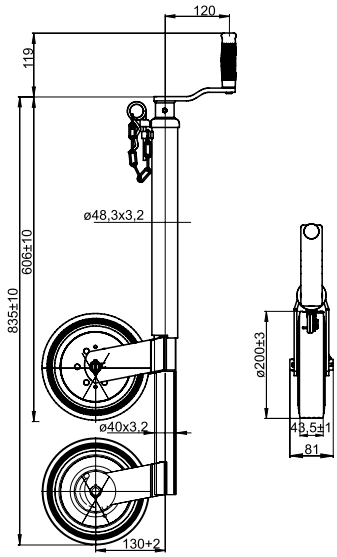

Type	Vertical load (max. kg)	Wheel material	Wheel size	Art. nr.
TK48-200/40 M	125	solid rubber + plastic rim + slide bearing	200×40	6D6307.001
TK48-200/40 AC	125	solid rubber + sheet metal rim + slide bearing	200×40	6D5807.001
TK48-200/40 AC	125	solid rubber + sheet metal rim + needle bearing	200×40	6D5915.004

TK 48-215/70 M

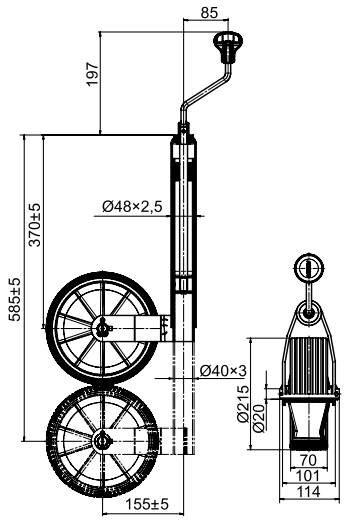

TK 48-260/85

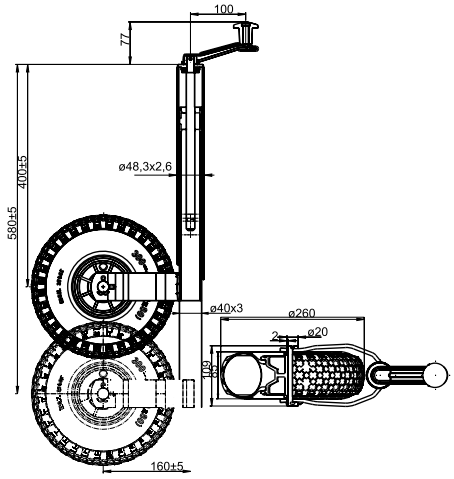

TK 48-225/ 65 AC E-Load

NEW!

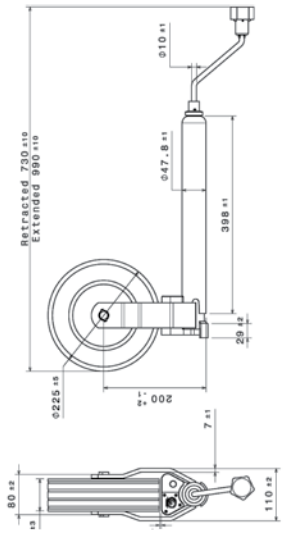

Type	Vertical load (max. kg)	Wheel material	Wheel size	Art. nr.
TK48-215/70 M	125	solid rubber + plastic rim + slide bearing	215×70	6D5896.001
TK48-260/85 M	125	pneumatic wheel + plastic rim + slide bearing	260×85	6D6368.001
TK48-260/85 AC	125	pneumatic wheel + sheet metal rim + needle bearing	260×85	6D5353.001
TK48-225/65 AC E-Load	125	solid rubber + sheet metal rim + slide bearing	225×65	424098.001

TELESCOPIC JOCKEY WHEELS FOR TRAILERS AND CARAVANS

TK 60-220/70 AC

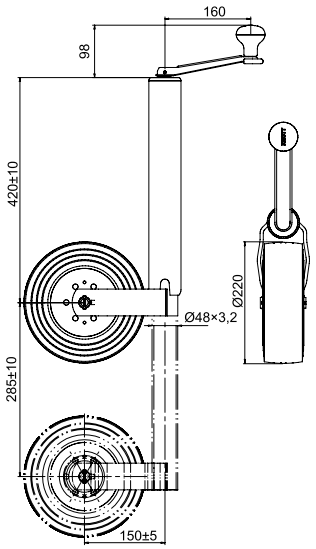

TK 60-220/65 AC
TK 60-220/70 AC

TK 60-220/65 AC TK 60-220/70 AC

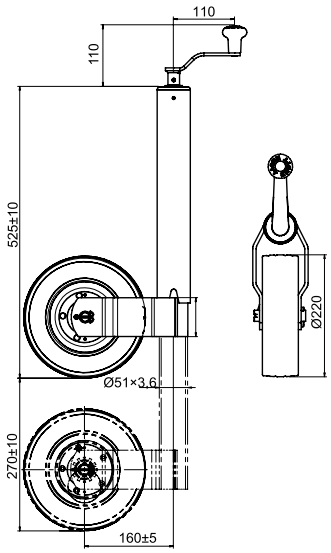

Type	Vertical load (max. kg)	Wheel material	Wheel size	Art. nr.
TK60-220/70 AC	150	solid rubber + sheet metal rim + slide bearing	220×70	6X1094.001
TK60-220/65 AC	250	solid rubber + sheet metal rim + slide bearing	220×65	6X1699.002

TK 60-215/70 M

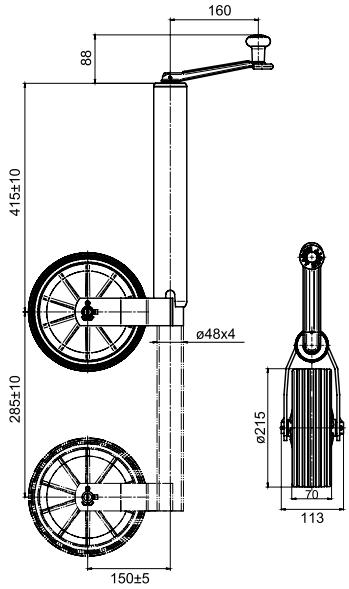

TK 60-260/85 M

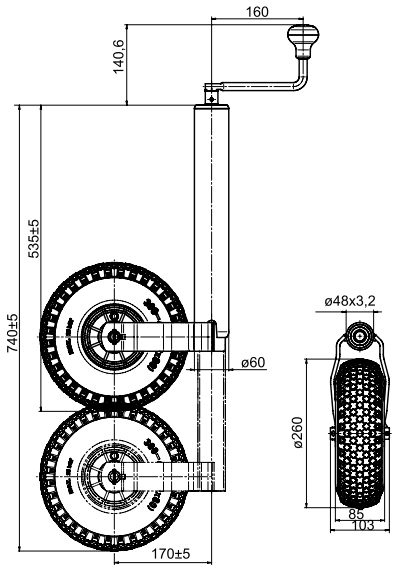

Type	Vertical load (max. kg)	Wheel material	Wheel size	Art. nr.
TK60-215/70 M	150	solid rubber + plastic rim + slide bearing	215×70	6D6153.001
TK60-260/85 M	150	pneumatic wheel + plastic rim + slide bearing	260×85	6D6183.001

TELESCOPIC JOCKEY WHEELS FOR TRAILERS AND CARAVANS

TKS 70-220/70 AC

square

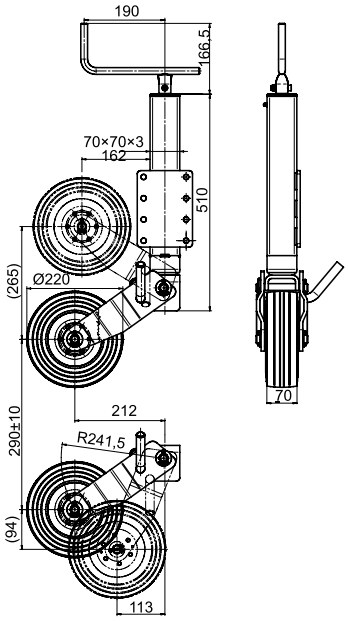

TKS 70-280/70 AC

round

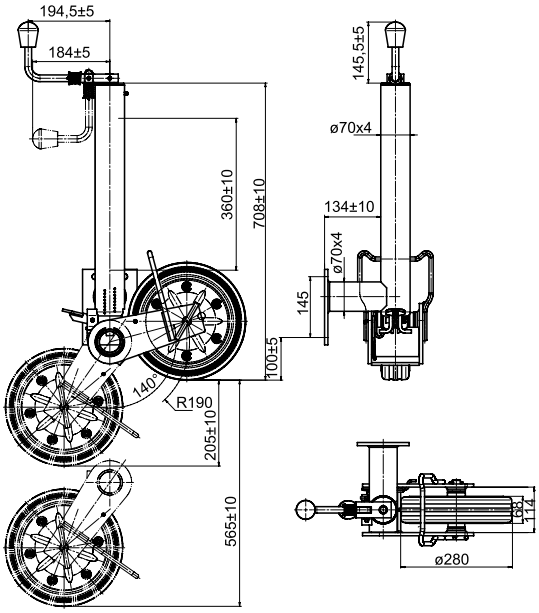

Type	Vertical load (max. kg)	Wheel material	Wheel size	Art. nr.
TKS70-220/70 AC	150	solid rubber + sheet metal rim + needle bearing	220×70	6D5406.001
TK70-280/70 AC	500	solid rubber + sheet metal rim + slide bearing	280×66	6D6528.001

STANDARD JOCKEY WHEELS WITH GREAT ADVANTAGES

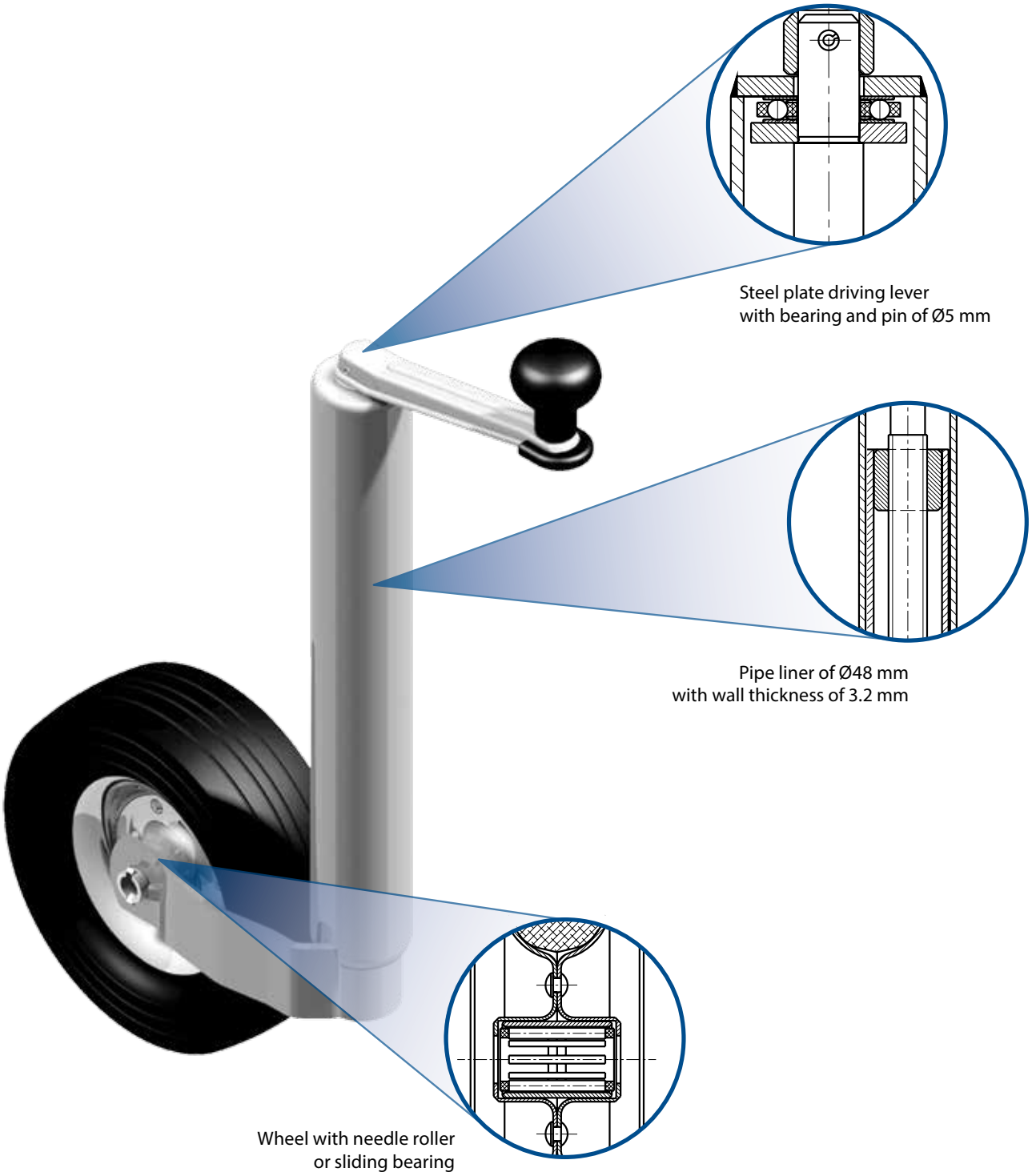

SUPPORT LEG FOR CARAVANS

The product can be used for:
- trailers
- caravans
- horse trailers

Material:
- steel

Surface treatment:
- hot-dip galvanization

Advantages of the product:
- stabilizes the trailer
- disencumbers the axle
- supports the trailer
- big ranch of usability
- 60° slue out
- universal crank

For information about the hole pattern please ask our sales personnel.

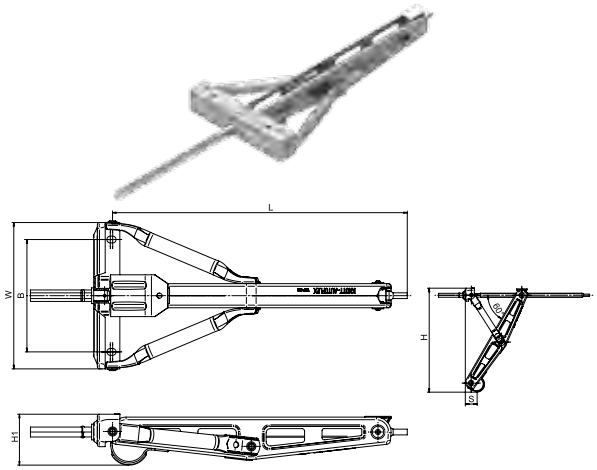

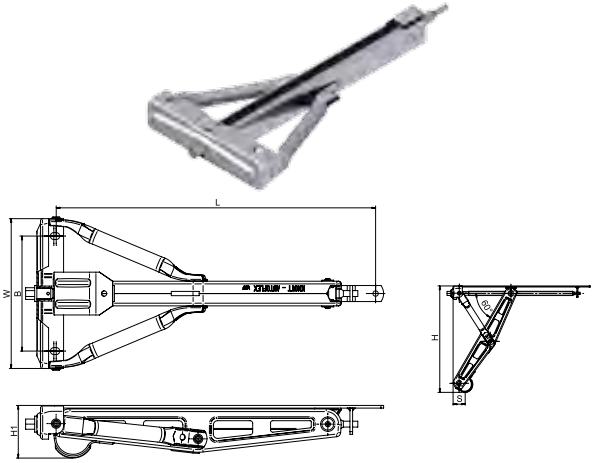

WHF

Type	Vertical load (max. kg)	L (mm)	W (mm)	B (mm)	H1 (mm)	H (mm)	S (mm)	Art. nr.
WHF001	900	568	280	215		457	115	6X1197.001
WHF002	1100	568	280	215	97	497	53	6X1197.002
WHF003	1100	597	280	215	97	497	57	6X1197.003
WHF004	1100	595,5	280	215	117	517	57	6X1197.004
WHF005	1100	568	280	215	97	497	56	6X1197.005
WHF006	1100	597	280	215	98	497	57	6X1197.006
WHF007	1100	561,5	280	215	100	498	50	6X1197.007
WHF008	1100	602	280	215	100	498	50	6X1197.008

WHF + Extender

Type	Vertical load (max. kg)	X (mm)	Art. nr.
WHF007 + 6D9201 extender	1100	150	6D9203.001
WHF007 + 6D9201 extender	1100	230	6D9204.001
WHF007 + 6D9201 extender	1100	270	6D9205.001
WHF007 + 6D9201 extender	1100	3440	6D9206.001

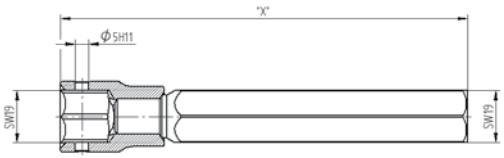

Support plates for WHF

Art. nr.
423344.001

MUDGUARD

MUDGUARD

Mounting position of mudguard and wheel

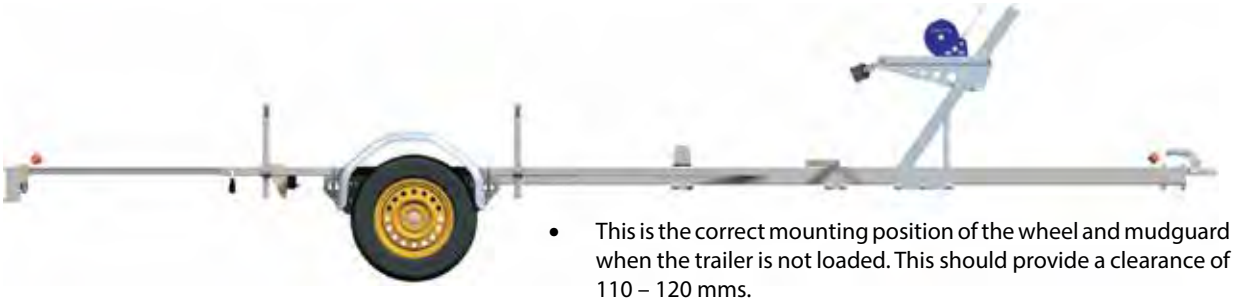

- This is the correct mounting position of the wheel and mudguard when the trailer is not loaded. This should provide a clearance of 110 – 120 mms.

- Under 1× or 2× load this clearance will change, but still ensures enough space for the wheel.

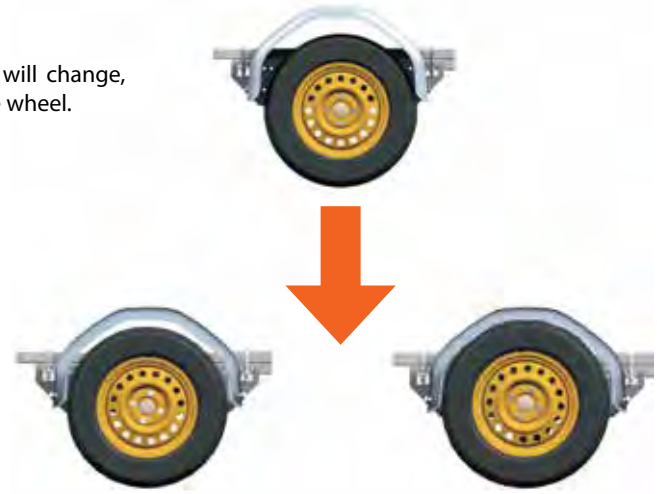

1 x load

2 x load

Please note that you gain a longer lifespan for your trailer, if you don't overload it!

Steel mudguard

- Materials:
  - stainless steel
  - sensimir – galvanized steel
- **Weatherproof construction!**
- Profile for sidewall mounting: 12/40
- Radius: 12

Plastic mudguard

- Material:
  - high quality plastic
- Profile for sidewall mounting:
  - 6/25; 12/37,5; 12/40

TRAILER MUDGUARDS

Single axle

Type	Lenght S (mm)	Height H (mm)	Width B (mm)	Profile	Mounting holes (pcs)	Wheel size max.	Art. nr.
A206612K	660	345	200	12/40		165/80R13	6X0573.001
A206612K(F)	660	345	200	12/40	7	165/80R13	6X0573.014
A207012K	700	390	200	12/40		165/80R14	6X0573.002
A207512K	750	415	200	12/40		165/80R16	6X0573.003
A207512K(F)	750	415	200	12/40	5	165/80R16	6X0573.013
A227512K	750	390	220	12/40		185/80R15	6X0573.004
A227512K(F)	750	390	220	12/40	5	185/80R15	6X0573.018
A228012K	800	415	220	12/40		185/80R17	6X0573.005
A228612K	860	445	220	12/40		185/80R19	6X0573.006
A247512K	750	390	240	12/40		205/80R14	6X0573.007
A247512K(F)	750	390	240	12/40	5	205/80R14	6X0573.017
A248012K	800	415	240	12/40		205/80R16	6X0573.008
A248012K(F)	800	415	240	12/40	3 + 4 oval	205/80R16	6X0573.015
A248612K	860	445	240	12/40		205/80R18	6X0573.009
A248040K	800	415	240	40/40		205/80R16	6X0573.010
A268012K	800	445	260	12/40		225/80R14	6X0573.011
A268012K(F)	800	445	260	12/40	7	225/80R14	6X0573.016
A268040K	800	415	260	40/40		225/80R14	6X0573.012

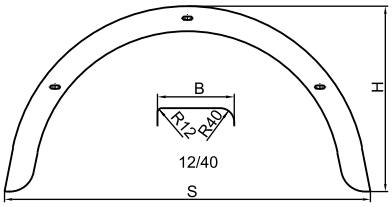

- Mudguards with a profile of 12/40 and 40/40
- Radius 12 is for sidewall-mounting on a trailer
- Radius 40/40 is for mounting on the supports of trailers, like boat trailers
- Material: galvanized steel

Tandem axle

Type	Lenght S (mm)	Height H (mm)	Width B (mm)	Profile	Mounting holes (pcs)	Wheel size max.	Art. nr.
A2213912KT	1390	375	220	12/40		185/80R12	6X0570.005
A2213912KT(F)	1400	350	220	12/40	5 oval	185/80R12	6X0570.014
A2215512KT	1550	375	220	12/40		185/80R15	6X0570.006
A2215512KT(F)	1550	375	220	12/40	7 oval	185/80R15	6X0570.018
A2215540KT	1550	375	220	40/40		185/80R15	6X0570.002
A2415012KT	1500	410	240	12/40		205/80R13	6X0570.007
A2415012KT(F)	1500	410	240	12/40	7 oval	205/80R13	6X0570.017
A2415040KT	1500	410	240	40/40		205/80R13	6X0570.003
A2615012KT	1500	410	260	12/40		225/80R12	6X0570.008
A2615012KT(F)	1500	400	260	12/40	7 oval	225/80R12	6X0570.016
A2615040KT	1500	410	260	40/40		225/80R12	6X0570.004
A2014812KT	1480	365	200	12/40		165/80R15	6X0570.010
A2415112KT	1510	390	240	12/40		205/80R13	6X0570.011

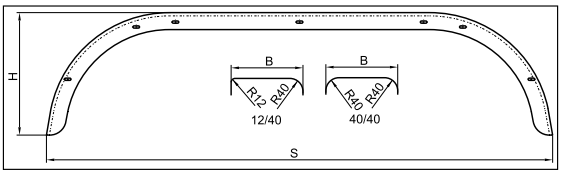

Single axle stainless steel mudguard

Type	Lenght S (mm)	Height H (mm)	Width B (mm)	Profile	Mounting holes (pcs)	Wheel size max.	Art. nr.
13"	660	345	200	12/40		165/80R13	6X1485.001
14"	750	390	240	12/40	3 oval	205/80R14	6X1485.002
A268040K	800	415	260	40/40		205/80R16	6X1485.003
10"	620	300	160	12/40		125/80R14	6X1485.004
12"	660	340	190	12/40		155/80R13	6X1485.005
13"	735	370	220	12/40		185/80R14	6X1485.006
14"	800	415	245	40/40		205/80R16	6X1485.007

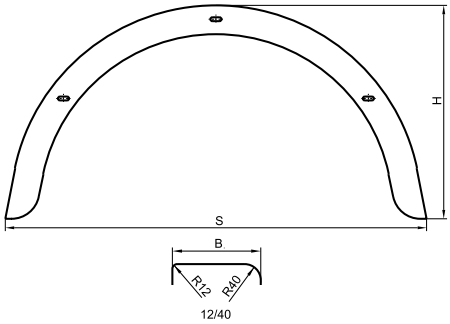

- Mudguards with a profile of 12/40
- Radius 12 ms for sidewall-mounting on a trailer.
- Radius 40/40 is for mounting on the trailer supports, for ex. boat trailers
- Material: stainless steel

Double axle stainless steel mudguard

Type	Lenght S (mm)	Height H (mm)	Width B (mm)	Profile	Mounting holes (pcs)	Wheel size max.	Art. nr.
14"	1500	410	240	12/40	7 oval	205/80R13	6X1486.001
14"	1500	410	240	12/40		205/80R13	6X1486.002

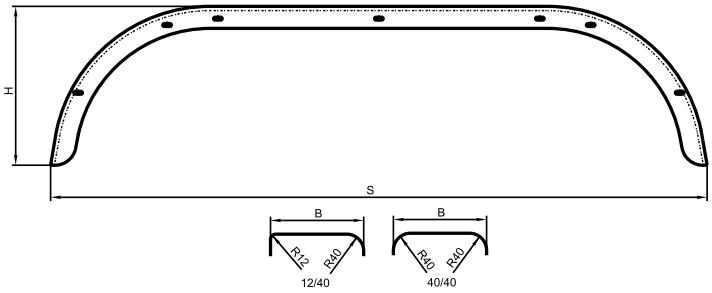

- Double axle mudguards with a profile of 12/40 and 40/40.
- Radius 12 ms for sidewall-mounting on a trailer.
- Radius 40/40 is for mounting on the trailer supports, for ex. boat trailers
- Material: stainless steel

Single axle trailer mudguards (angular)

Type	Lenght S (mm)	Height H (mm)	Width B (mm)	Mounting holes (pcs)	Material	Wheel size max.	Art. nr.
A176712S	670	340	170		galvanized steel	135/80R15	6X1031.001
A176712S(F)	670	340	170	5	galvanized steel	135/80R15	6X1031.012
A207612S	760	390	200		galvanized steel	165/80R17	6X1031.002
A207612S(F)	760	360	200	7	galvanized steel	165/80R17	6X1031.013
A207612S(F)	760	350	200	11	galvanized steel	165/80R17	6X1031.007
A227612S	760	390	220		galvanized steel	185/80R15	6X1031.003
A227512S	750	390	220		galvanized steel	185/80R15	6X1031.004
A247512S	750	390	240		galvanized steel	205/80R14	6X1031.005
A155512S(F)	550	245	150	5	galvanized steel	120/80R11	6X1031.009
ET-70343-A Knott INOX	680	350	200		Stainless steel	255/80R12	6X1486.006
A227512S INOX	750	390	220		Stainless steel	185/80R15	6X1486.007
A176712S INOX	670	340	170		Stainless steel	135/80R15	6X1486.009

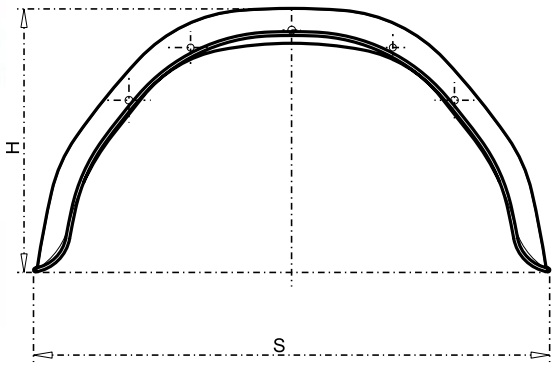

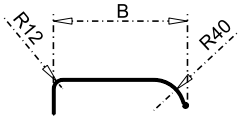

- Angular mudguards with a profile of 12/40
- Radius 12 is for sidewall-mounting on a trailer

We can produce our mudguards in any (RAL) colour according to customer requests. Please request the colour of the mudguard when placing your order.

Double axle trailer mudguard (angular)

Type	Lenght S (mm)	Height H (mm)	Width B (mm)	Mounting holes (pcs)	Material	Wheel size max.	Art. nr.
A2315112ST	1510	380	230		galvanized steel	195/80R14	6X0570.012
A2315112ST(F)	1520	400	230	9 oval	galvanized steel	195/80R14	6X0570.015
A2315112ST INOX	1510	380	230		Stainless steel	195/80R14	6X1486.008

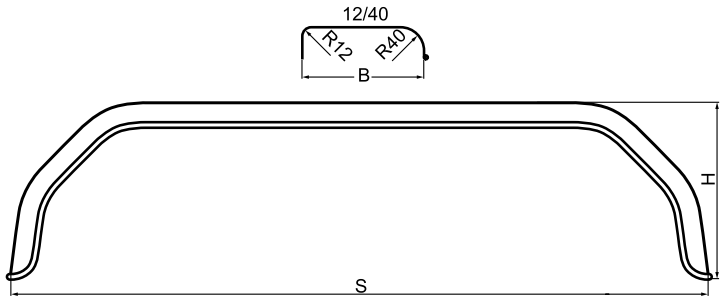

- Tandem fenders with a profile of 12/40.
- Radius 12 is for sidewall-mounting on a trailer.

Trailer mudguard (half)

Type	Lenght S (mm)	Height H (mm)	Width B (mm)	Mounting holes (pcs)	Material	Wheel size max.	Art. nr.
5227 Je & Bh	632	~314	220	4	galvanized steel	185/80R15	6A5227.001
5228 JH & Be	632	~314	220	4	galvanized steel	185/80R15	6A5228.001
5229 Jh & Be	712	~382	240	4	galvanized steel	205/80R14	6A5229.001
5230 Je & Bh	712	~382	240	4	galvanized steel	205/80R14	6A5230.001

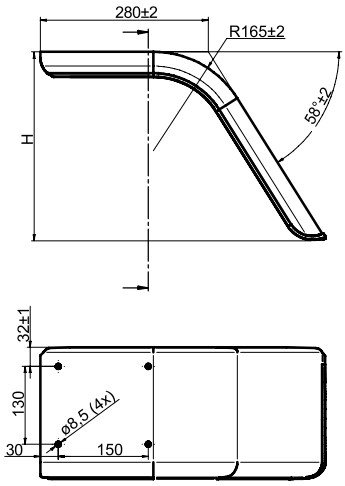

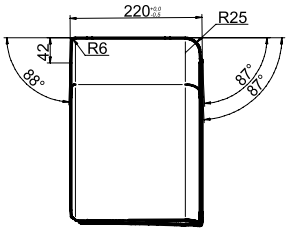

- Trailer mudguards with a profile of 6/25.
- Radius 12 is for sidewall-mounting on a trailer.
- These mudguards have to be mounted on the bottom plate of the trailer.

PLASTIC MUDGUARDS WITH MUDFLAP

Type	Length S (mm)	Height H (mm)	Width B (mm)	Side	Art. nr.	Mudflap
6A6092.002	678	336	180	right	6X1792.001	6X1790
6A6092.002	678	336	180	left	6X1792.002	6X1790
6X0744.003	660	320	200	right	6X1792.003	6X1790
6X0744.003	660	320	200	left	6X1792.004	6X1790
6X0744.004	760	320	220	right	6X1792.005	6X1790
6X0744.004	760	320	220	left	6X1792.006	6X1790
6X1506.002	1550	400	240	right	6X1792.007	6X1790
6X1506.002	1550	400	240	left	6X1792.008	6X1790

left

right

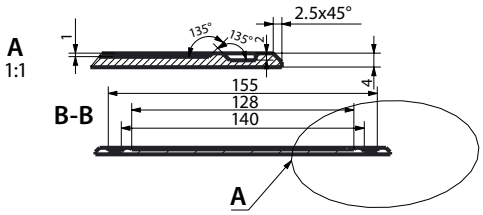

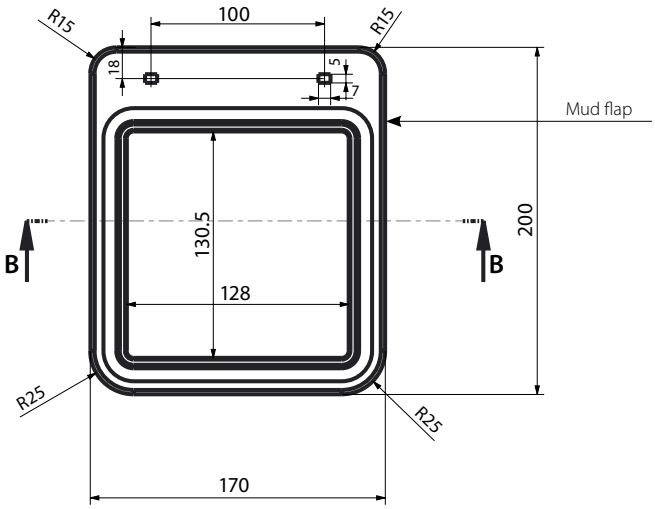

PLASTIC MUDGUARD

Type	Length S (mm)	Height H (mm)	Width B (mm)	Profile	Colour	Art. nr.
A186812SM	678	336	180	12/40	gray RAL7040	6A6092.001
A186812SM	678	336	180	12/40	black	6A6092.002
13"	660	327	200	10/30	black	6X0744.003
14"	760	327	220	10/30	black	6X0744.004
Tandem	1550	400	240	10/30	black	6X1506.002
8"-12"	525	150	175	30/30	gray	6A6594.101
8"-12"	525	150	175	30/30	white	6A6594.201

3-Steps plastic mudguards

Type	Length S (mm)	Height H (mm)	Width B (mm)	Colour	Art. nr.
12"	950	245	225	gray	6A6595.101
13"	1025	295	250	gray	6A6595.102
14"	1100	325	275	gray	6A6595.103
12"	950	245	225	white	6A6595.201
13"	1025	295	250	white	6A6595.202
14"	1100	325	275	white	6A6595.203
12"	950	245	225	black	6A6595.301
13"	1025	295	250	black	6A6595.302
14"	1100	325	275	black	6A6595.303

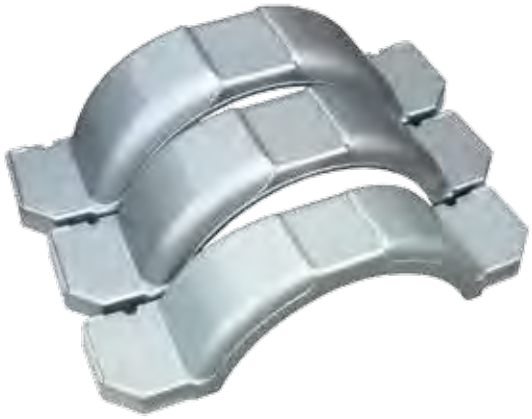

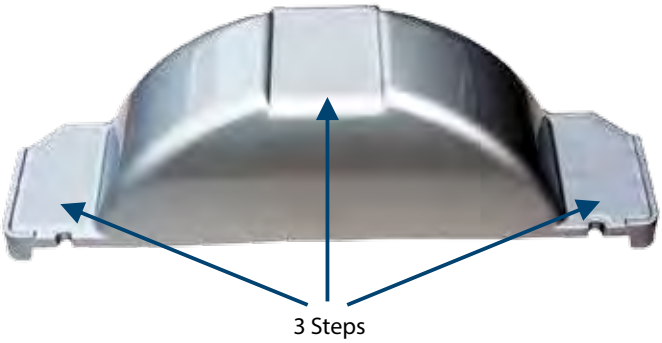

VEHICLE FASTENERS, ACCESSORIES

OVERCENTRE LATCH

RB34

- With spring and round bracket
- Zinc plated
- Art. nr.: **6S5719.001**

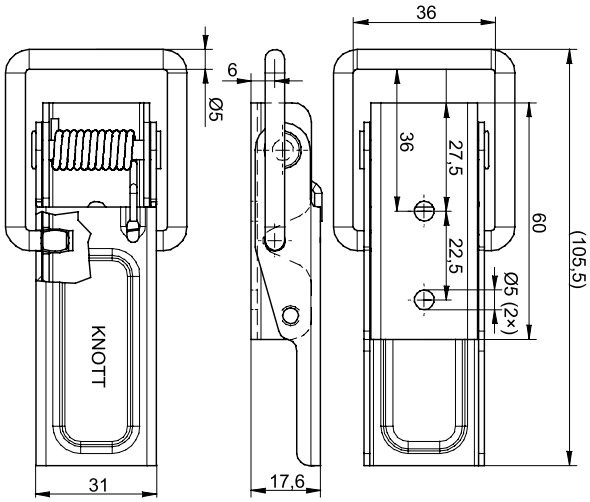

RB48

- With spring and round bracket
- Zinc plated
- Art. nr.: **6S5656.001**

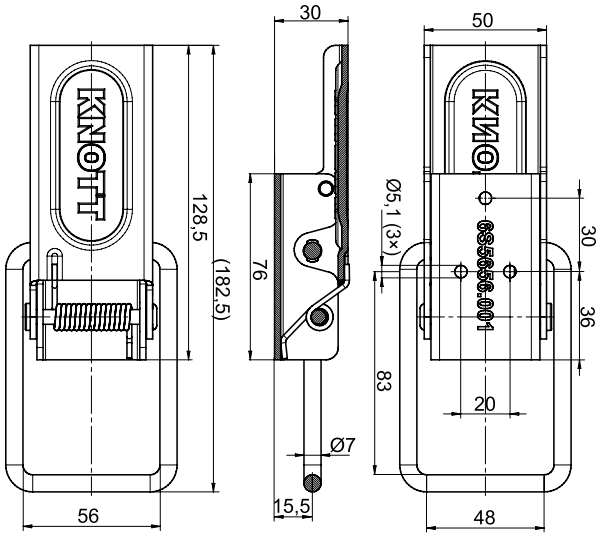

SRB32

- Lockable
- With round bracket
- Stainless steel
- Art. nr.: **6S5789.001**

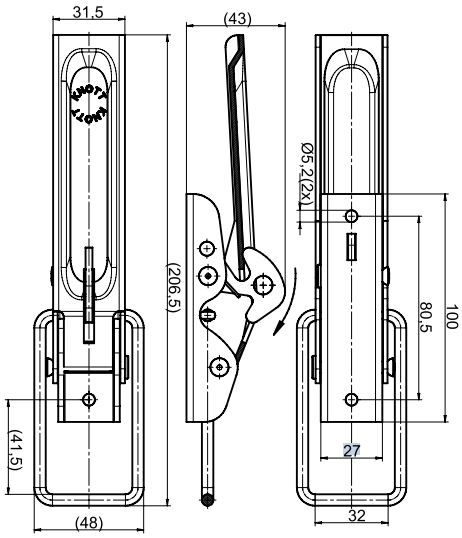

SVB20

- with flat bracket
- lockable
- zinc plated
- Art. nr.: **6S5673.001**

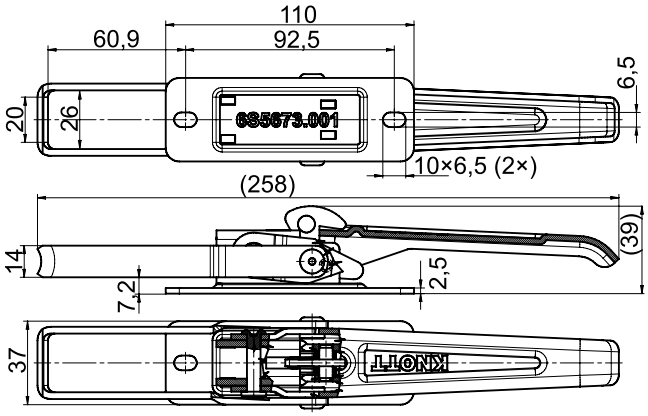

SVBA36

- with flat bracket
- lockable
- zinc plated
- Art. nr.: **6S5672.001**

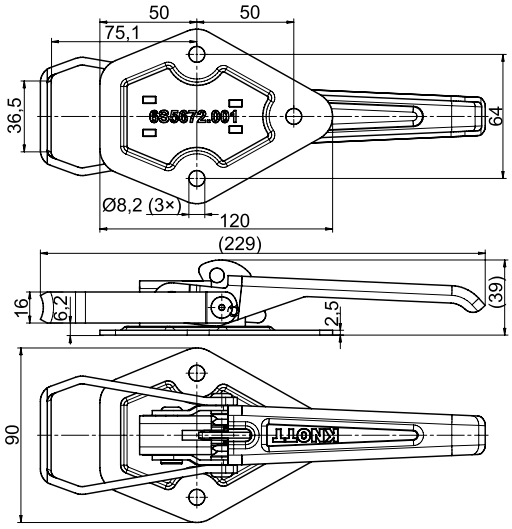

SVBB36

- with flat bracket
- lockable
- zinc plated
- Art. nr.: **6S5674.001**

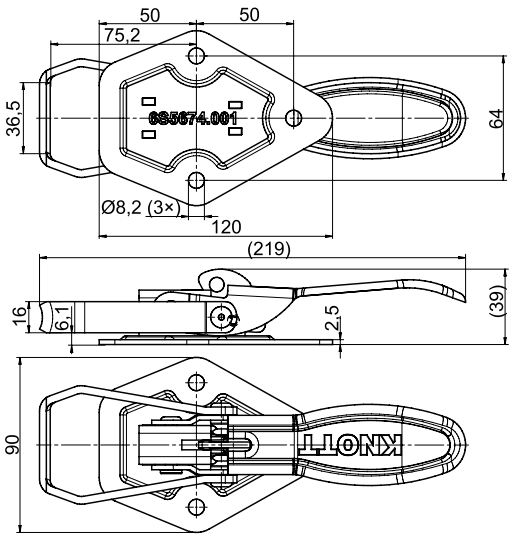

OVERCENTRE LATCH

FVBA46

- With spring and flat bracket
- Zinc plated
- Art. nr.: **6S5779.001**

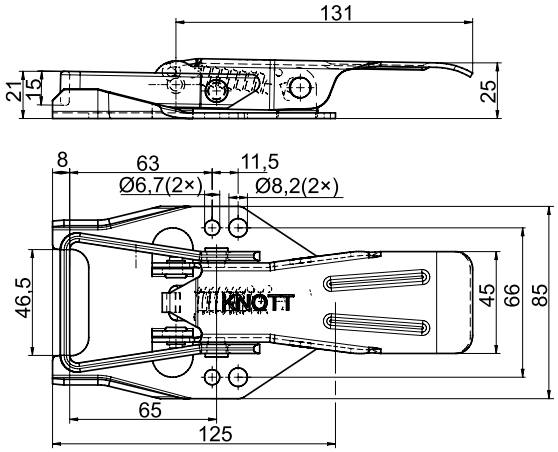

FVBB46

- With spring and flat bracket
- Zinc plated
- Art. nr.: **6S5778.001**

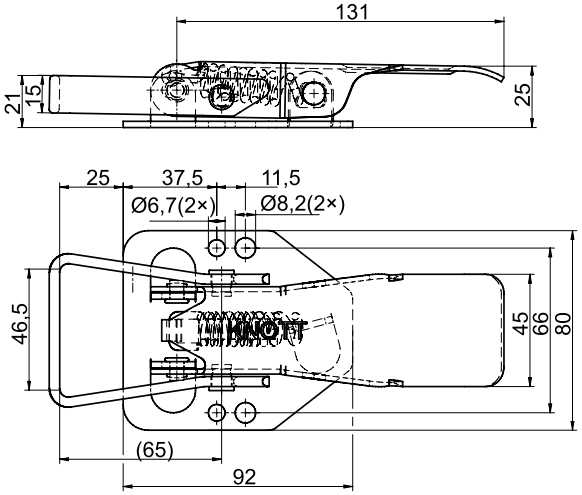

FVB35

- With spring and flat bracket
- Zinc plated
- Art. nr.: **6S5692.001**

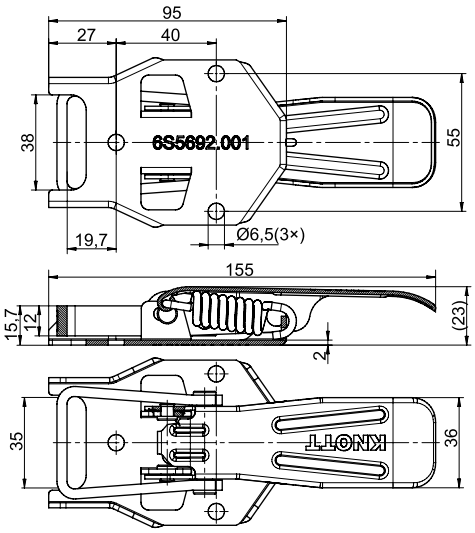

LATCH, HOOK

Spring latch

- L=31mm
- With plastic handle
- Zinc plated
- Art. nr.: **6S5716.001**

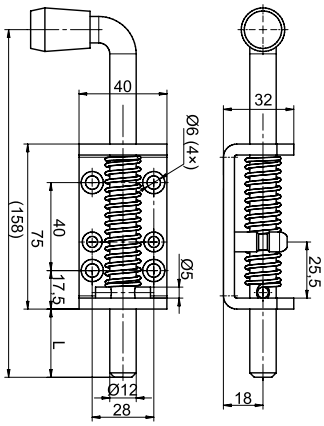

Adjustable overcentre latch FVS15

- With spring
- Zinc plated
- Art. nr.: **6S6288.001**

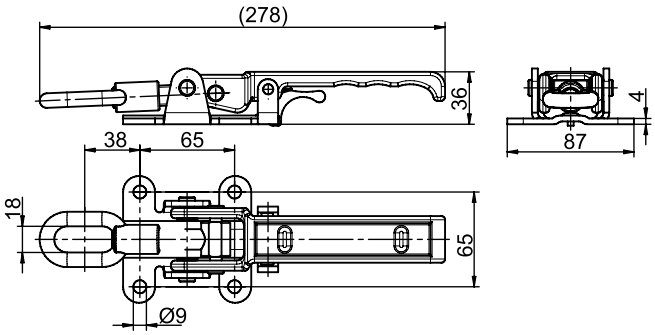

Engaging hook

- Steel (without surface treatment
- Art. nr.: **6S6289.001**

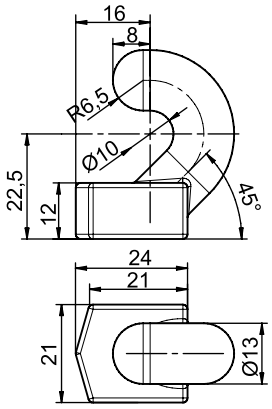

Engaging hook A11

- Straight
- Zinc plated
- Art. nr.: **6S5752.001**

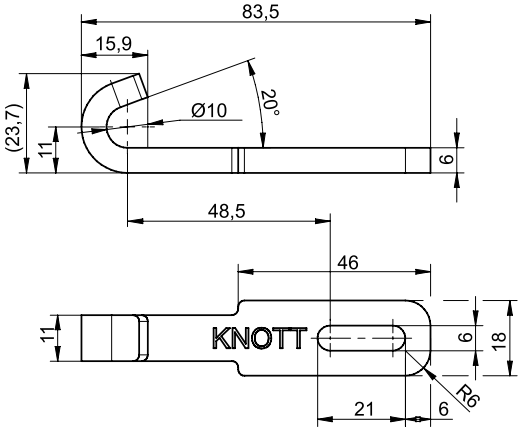

CATCH PLATE

A30

- Zinc plated stainless steel
- Art. nr.: **6S5756.001**

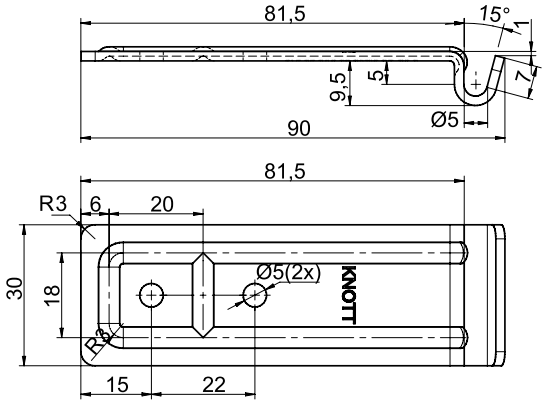

B30

- Cranked
- Zinc plated
- Art. nr.: **6X0015.007**

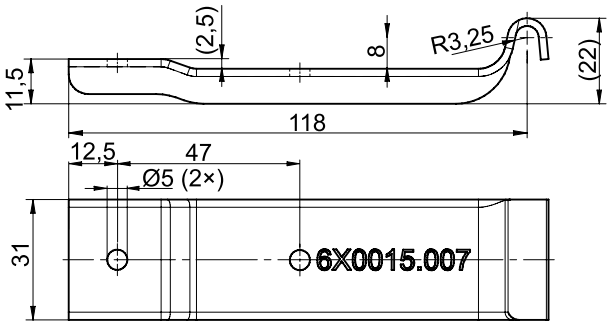

C30

- Straight
- Zinc plated
- Art. nr.: **6S5751.001**

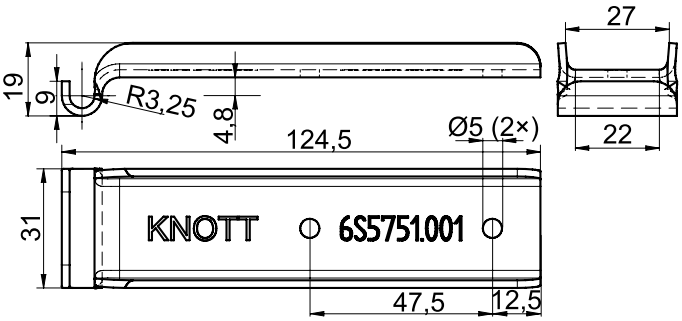

C35

- Right angle
- Zinc plated
- Art. nr.: **6S5754.001**

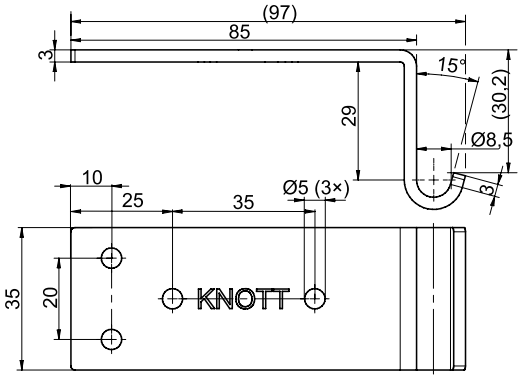

B20

- Zinc plated
- Art. nr.: **6S5753.001**

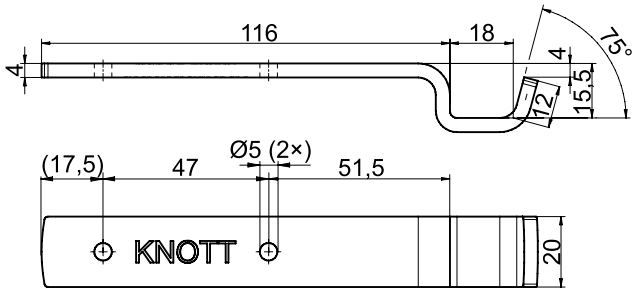

B35

- Zinc plated
- Art. nr.: **6S5757.001**

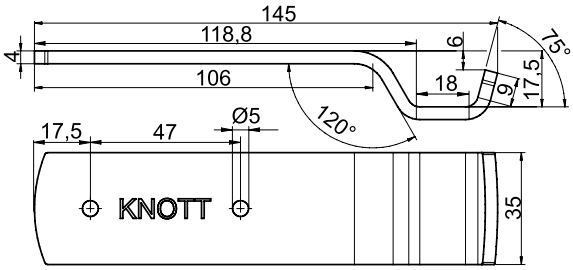

D30

- For FRS19
- Polished stainless steel
- Art. nr.: **6S5846.001**

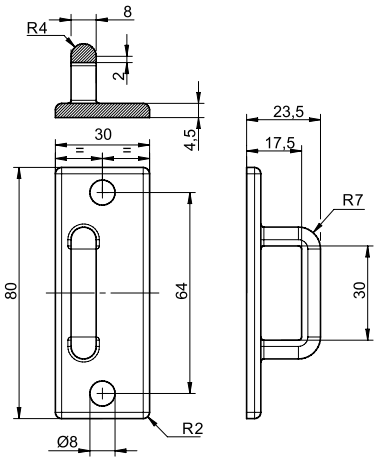

Lock-complement compatibility recommendations

Lock \ Complement	6S5756.001	6X0015.007	6S5751.001	6S5754.001	6S5753.001	6S5757.001	6S5752.001	6S5758.001	6S5767.001	6S6289.001
6S5719.001	✓	✓	✓							
6S5656.001				✓						
6S5789.001	✓	✓	✓							
6S5673.001					✓					
6S5672.001						✓				
6S5674.001						✓				
6S5779.001						✓				
6S5778.001						✓				
6S5692.001						✓				
6S6288.001							✓	✓		
6S5762										✓
6S5766										✓
6S5770									✓	

SPRING LATCH

Door spring latch FRS19

- For premium trailer bodies
- Polished stainless steel
- Art. nr.: **6S5838.001**

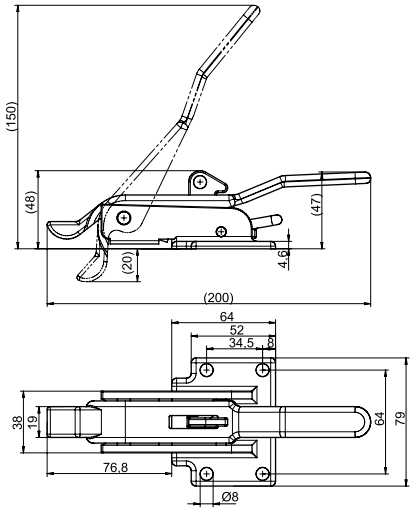

LASHING RINGS

Lashing ring + cleat

- Triangular ring
- Zinc plated
- 250 daN
- Art. nr.: **6S5707.001**

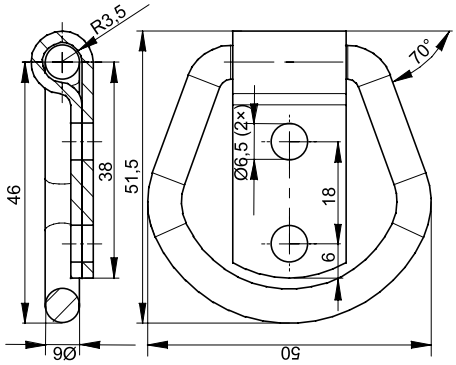

Lashing ring + cleat

- D-ring
- Zinc plated
- 250 daN
- Art. nr.: **6S5780.001**

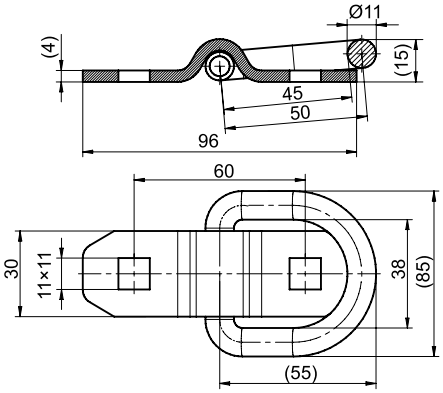

Lashing ring + cleat

- D-ring
- Zinc plated
- 250 daN
- Art. nr.: **6S5702.001**

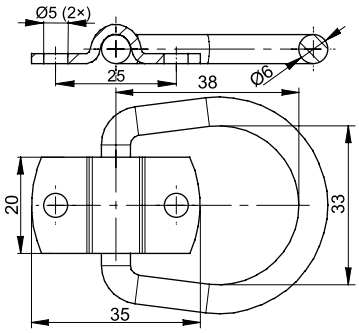

LASHING RINGS

Lashing ring + cleat

- Triangular ring, round base
- Stainless steel
- 250 daN
- Art. nr.: **6S5741.001**

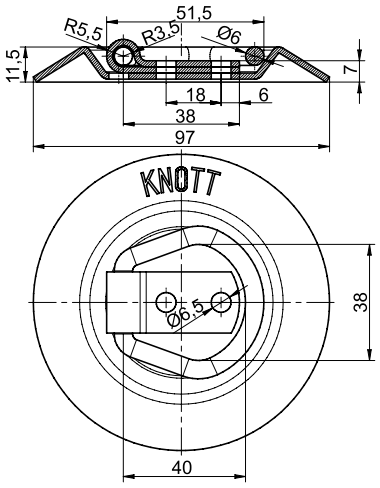

Recessed lashing ring

- Sprung eye
- Rectangular base
- Zinc plated
- 250 daN
- Art. nr.: **6S5727.001**

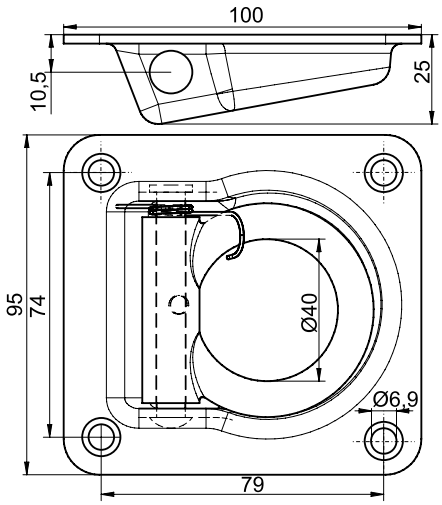

Recessed lashing ring

- Oval
- Zinc plated
- 250 daN
- Art. nr.: **6S5726.001**

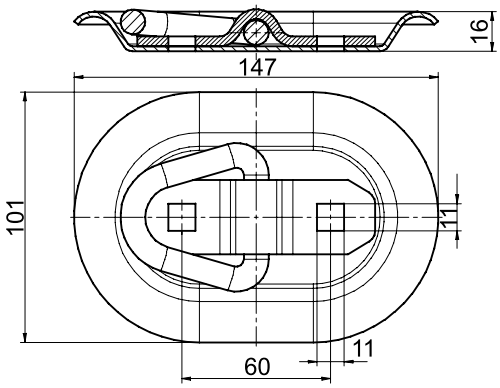

LOCKING DEVICES

Angle lever lock WHV

- Zinc plated
- Art. nr.: **6S5762.001** - left
  6S5762.002 - right

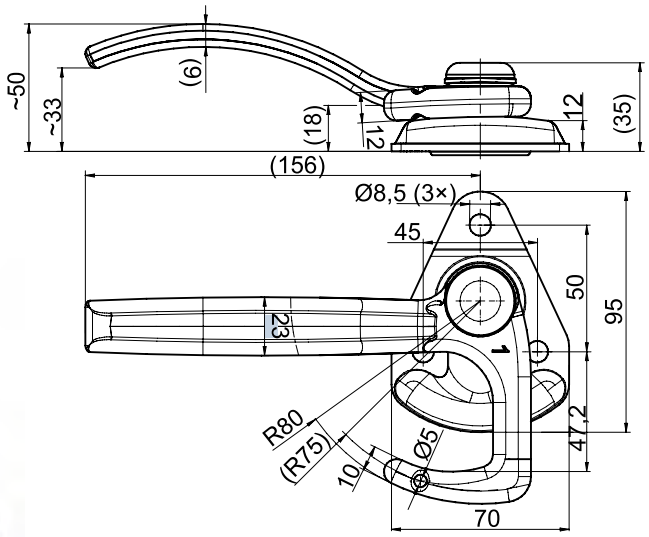

Eyelet E0

- Zinc plated
- Art. nr.: **6S5767.001**

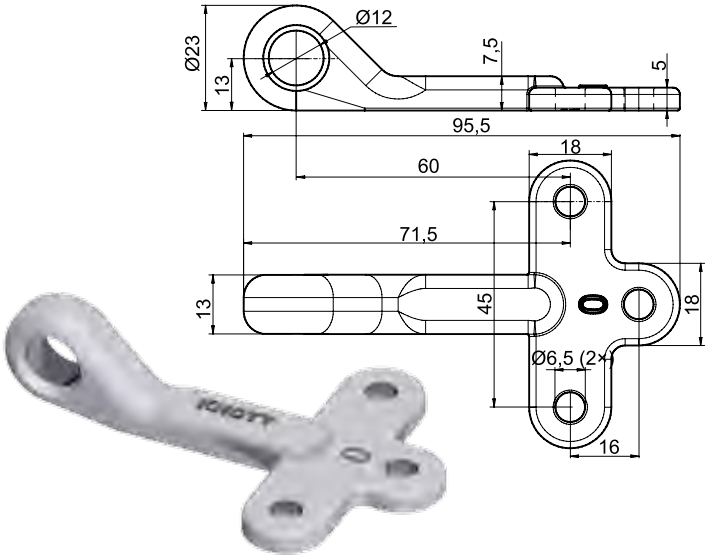

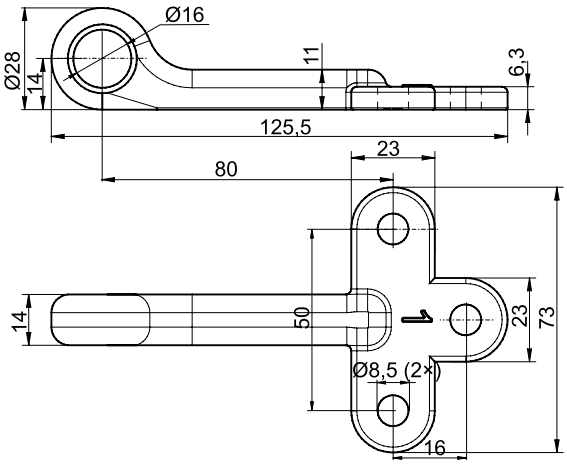

Eyelet E1

- Zinc plated
- Art. nr.: **6S5758.001**

BOW LOCK

Bow lock BV0

- Base plate: 60×60 mm
- Zinc plated
- Art. nr.: **6S5770.001** - left
  6S5770.002 - right

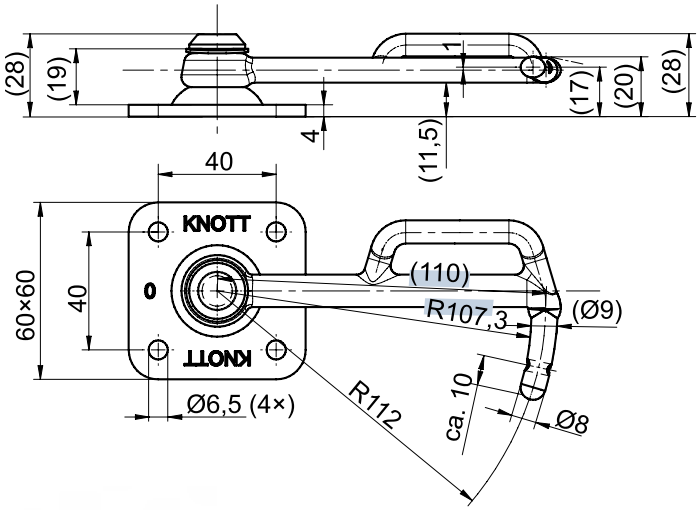

Bow lock BV1

- Base plate: 70×70 mm
- Zinc plated
- Art. nr.: **6S5766.001** - left
  6S5766.002 - right

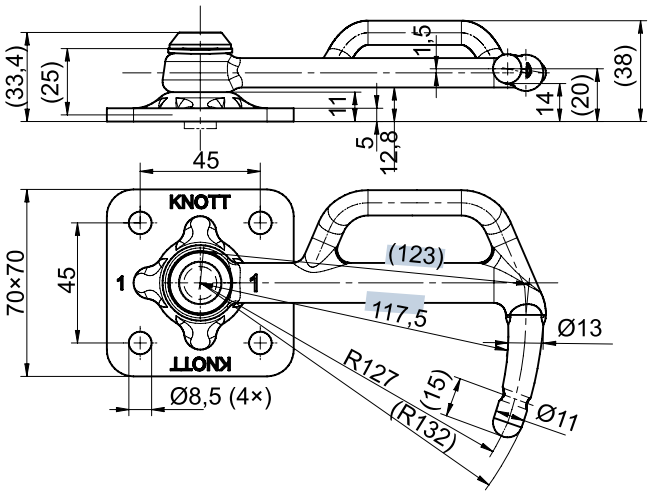

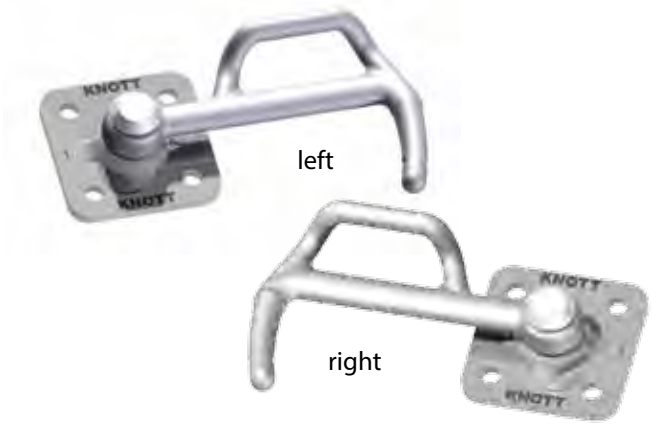

HINGE

Hinge 310

- For Ø16 mm pin
- Zinc plated
- Art. nr.: **6S5738.001**

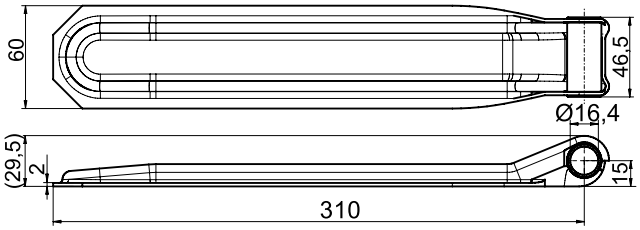

Hinge 260

- For Ø16 mm pin
- Zinc plated
- Art. nr.: **6S5738.002**

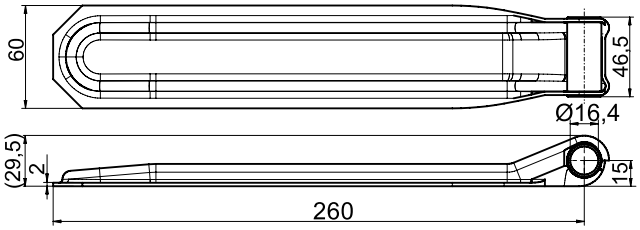

Hinge pin

- Ø16 mm
- Natural forged steel
- Weld on
- Art. nr.: **6S5739.001**

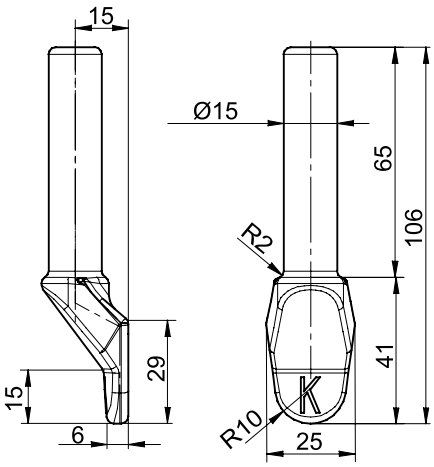

Hinge L=60 mm

- For premium trailer bodies
- Corrosion resistant
- Spring bounding (4×60°)
- Art. nr.: **6X0827.017**

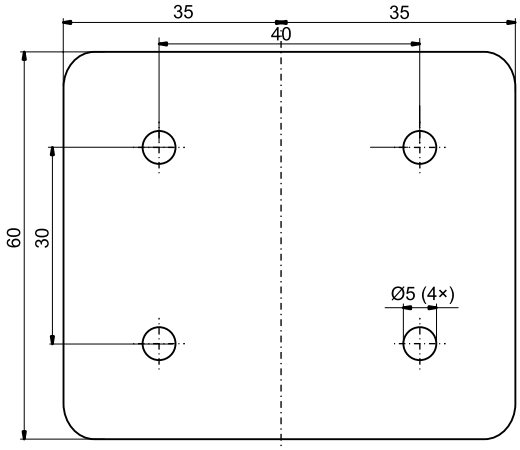

hole pattern

Hinge L=110 mm

- For premium trailer bodies
- Corrosion resistant
- Spring bounding (4×60°)
- Art. nr.: **6X0827.016**

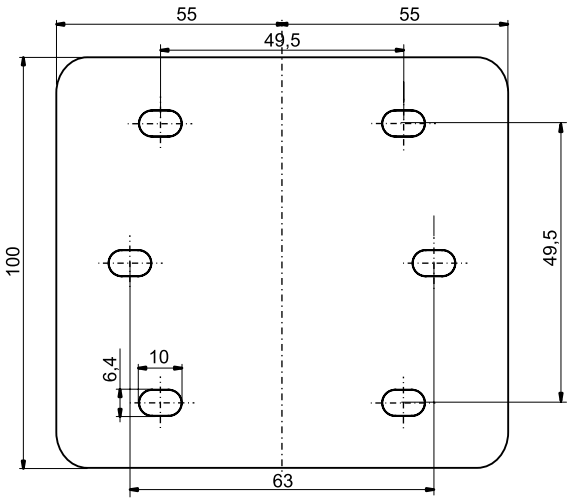

hole pattern

- Both types can be fixed in 4 position (60 degrees) with the bumper buffer within the 240 degree range.

LAMP BRACKET

Lamp holder

- Zinc plated
- Art. nr.: **6S5700.001**

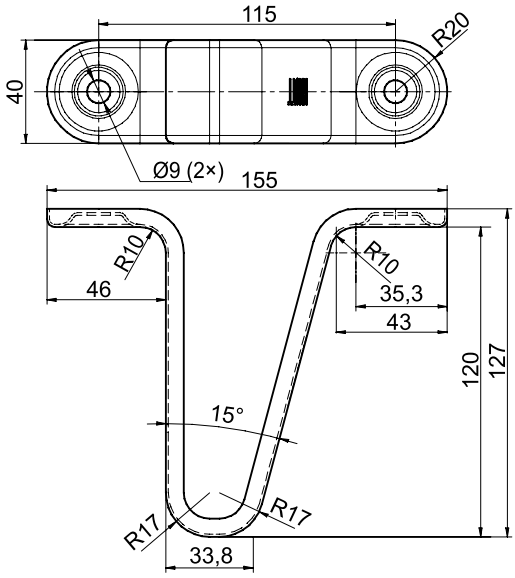

Lamp holder with bores

- Zinc plated
- Art. nr.: **6S5701.001**

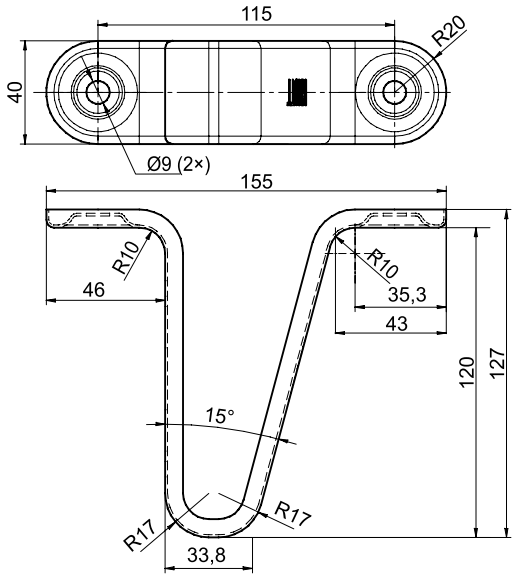

Slip resistant plywood

Art. nr.	Thickness mm	Plate size mm	Sign	Packaging pcs/pallet
6X0835.001	9	1250x2500	J/NY	65
6X0835.002	12	1250x2500	J/NY	50
6X0835.003	15	1250x2500	J/NY	40
6X0835.004	18	1250x2500	J/NY	35
6X0835.005	21	1250x2500	J/NY	30
6X0835.007	9	1500x2500	J/W	65
6X0835.008	12	1250x2500	J/W	50
6X0835.009	15	1250x2500	J/W	40
6X0835.010	18	1250x2500	J/W	30
6X0835.021	9	1500x3000	J/W	65
6X0835.022	12	1500x3000	J/W	50
6X0835.023	15	1500x3000	J/W	40
6X0835.024	18	1500x3000	J/W	30

- 9-21 mm thickness
- Waterproof glued (AW 100)
- Coated with phenol-pellicle on both sides (120g/m^2)
- Non-skid surfacing in one-side (screen printed)
- Both edge handled
- One side patterned, one side smooth
- Apparent density: 690kg/m3

Slewing ring

Nr.	Type	A (mm)	B (mm)	C (mm)	D (mm)	E (mm)	F (mm)	G (mm)	H (mm)	Load capacity max. (kg)	Art. nr.
1	400 Type1	400	400	310	292	375	375	6	55	750	6X1028.005
2	500 Type1	500	500	410	392	475	475	6	55	1000	6X1028.006
3	650 Type2	650	650	568	543	625	625	7	65	1700	6X1028.004
4	650 L	650	592	542	480	625	510	8	45	1500	6X1028.007
5	850 N	850	787	734	665	825	690	8	52	3500	6X1028.003

1-3

4-5

- For agricultural trailers and internal transportation up to 25km/h

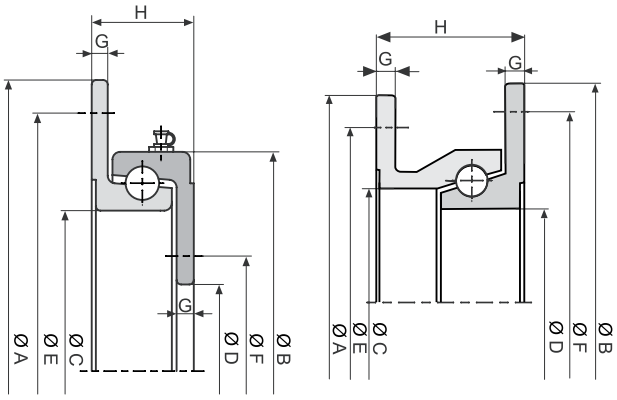

TRAILER WHEELS

Tyres

Type	Load capacity (kg) at 140km/h	Art. nr.
Tyre 155/80 R13	437	6X0352.009
Tyre 165 R13C	670	6X0352.010
Tyre 195/50 B10	750	6X0352.015
Tyre 185 R14 C	850	6X0352.017
Tyre 195/50 R13 C	900	6X0352.018
Tyre 165/70 R13	437	6X0352.025

Rims

Type	Pitch circle	Load capacity (kg) at 140km/h	Art. nr.
Wheel disc 4 J×13" H2 ET30	100x4	575	6X0630.003
Wheel disc 4,5 J×13" H2 ET30	100x4	575	6X0630.002
Wheel disc 4,5 J×13" H2 ET30	112x5	675	6X0630.005
Wheel disc 4,5 J×13" ET0	112x5	900	6X0630.012
Wheel disc 4,5 J×12" ET30	112x5	900	6X0630.014
Wheel disc 5 J×13" H2 ET30	112x5	700	6X0630.006
Wheel disc 5,5 J×13" H2	112x5	900	6X0630.016
Wheel disc 5,5 J×14" H2 ET30	112x5	900	6X0630.001
Wheel disc 6 J×10"	112x5	750	6X0630.013
Wheel disc 6 J×14" H2 ET30	112x5	900	6X0630.004
Wheel disc 6 J×14" H2 ET30	205x6	1250	6X0630.007

Wheels

Type	Pitch circle	Load capacity kg	Towing speed max. [km/h]	Art. nr.
4.00-8 ET 0	100×4	300	140	6X0698.035
5.00×10C	100×4	355	130	6X0698.023
155/70 R12	112×5	800	140	6X0698.014
155/70 R12C	112×5	900	140	6X0698.015
155/80 R13 ET30	100×4	437	190	6X0698.026
165 R13C	112×5	670	140	6X0698.009
165/70 R13 ET30	100×4	487	140	6X0698.006
165/80 R13	112×5	487	190	6X0698.008
185 R14 ET30	112×5	850	140	6X0698.004
195 R14 ET30	112×5	950	140	6X0698.005
195/50 B10 ET4	112×5	750	140	6X0698.007
195/50 R13C	112×5	900	140	6X0698.039
215 R14C	205×6	1120	140	6X0698.012

WINCHES, ROLLERS, PLASTIC PARTS

WINCHES

We keep three different types based on their operational functions:

- one-speed winch
- two-speed winch
- automatic hand winch

We distribute all types with three equipment variants:

- Without hauling apparatus
- Equipped with engaging hook and wire rope
- Equipped with engaging hook and strip

As for the one and two-speed winches, before moving the load, we must check the position of the three-way ratchet gear. To ensure our safety during the process of moving the load in one way or another, the position of the ratchet gear must be only in position 1 or 2.

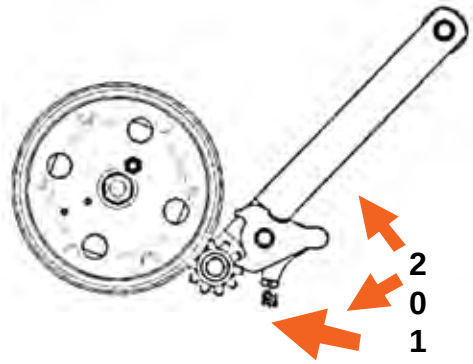

How to use the automatic brake winch

- For lifting, pulling: turn the handle clockwise.
- Stopping abruptly: the load can be stopped in any position simply by letting go off the handle.
- Lowering, cable releasing: turn the handle counterclockwise.
- The automatic brake can prevent the handle from kicking back.

The brake function will only be activated by a minimum load of 25 kgs (55 lbs).

Adjustable height winch stand

Includes 900 kg or 1150 kg load capacity winch.

Advantages:

- adjustable height (from 15° to 41°)
- easy to mount on the boat trailer
- strong construction
- new design

For further information about the assembly and the operating instructions of the winches please ask our contact person.

ACCESSORIES

Hook with eye

Load capacity (kg)	A×B×C (mm)	Art. nr.
250 kg	64x12x18	6X0018.001
500 kg	85x16x24	6X0018.002
1000 kg	116x20x33	6X0018.003

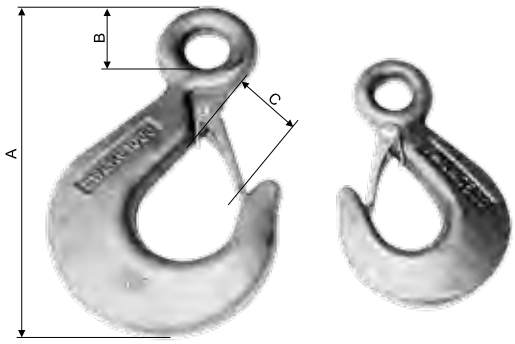

Wire thimble (galvanized)

A×C×L (mm)	Art. nr.
5x14x23	6X6899.002
6x16x25	6X6899.003
8x20x32	6X6899.005

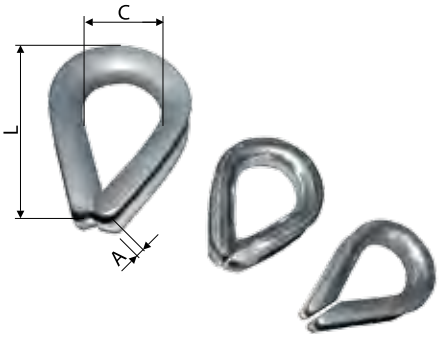

Wire-cable

Breaking load (kg)	Safe working load (kg)	Size (Ø)	Art. nr.
914	183	4 mm	6X0549.006
1420	284	5 mm	6X0549.002
2050	410	6 mm	6X0549.004
3600	730	8 mm	6X0549.005

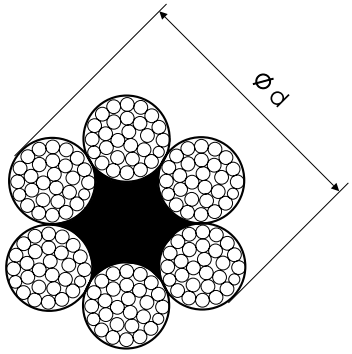

Wire-cable clip

A×B×C mm	Cable Ø (mm)	Article number
11×M5×24	5	6X0741.002
13×M5×28	6,5	6X0741.003
15×M6×34	8	6X0741.004
20×M8×42	10	6X0741.005

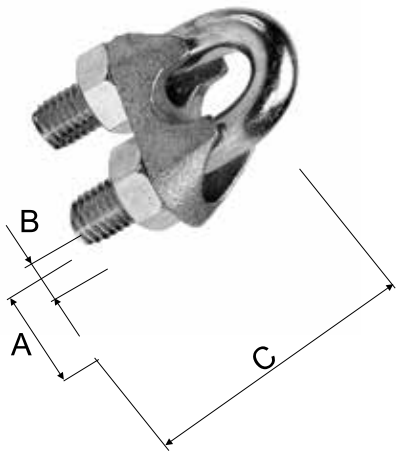

WINCHES - WITHOUT BRAKE

Type	Capacity (kg)	Reversible ratchet	Speed	Gear ratio	Cover	Towing element with hook	Colour	Art. nr.
702002	450	yes	1-speed	4,1:1	plastic	none	blue	6X0017.204
					plastic	none	black	6X0017.304
					plastic	none	red	6X0017.504
702007	900	yes	2-speed	4:1, 8:1	plastic	none	blue	6X0017.205
					plastic	none	black	6X0017.305
					plastic	none	red	6X0017.505
702008	1150	yes	2-speed	4:1, 8:1	plastic	none	blue	6X0017.206
					plastic	none	black	6X0017.306
					plastic	none	red	6X0017.506
702011	450	yes	1-speed	4,1:1	plastic	wire-cable	blue	6X0017.207
					plastic	wire-cable	black	6X0017.307
					plastic	wire-cable	red	6X0017.507
702016	900	yes	2-speed	4:1,8:1	plastic	wire-cable	blue	6X0017.208
					plastic	wire-cable	black	6X0017.308
					plastic	wire-cable	red	6X0017.508
702017	1150	yes	2-speed	4:1,8:1	plastic	wire-cable	blue	6X0017.209
					plastic	wire-cable	black	6X0017.309
					plastic	wire-cable	yellow	6X0017.409
					plastic	wire-cable	red	6X0017.509
702040	450	yes	1-speed	4,1:1	plastic	strap	blue	6X0017.210
					plastic	strap	black	6X0017.310
					plastic	strap	yellow	6X0017.410
					plastic	strap	red	6X0017.510
702041	900	yes	2-speed	4:1,8:1	plastic	strap	blue	6X0017.211
					plastic	strap	black	6X0017.311
					plastic	strap	yellow	6X0017.411
					plastic	strap	red	6X0017.511
702042	1150	yes	2-speed	4:1,8:1	plastic	strap	blue	6X0017.212
					plastic	strap	black	6X0017.312
					plastic	strap	red	6X0017.512

Capacity (kg)	Speed	Gear ratio	Cover	Towing element with hook	Colour	Remark	Art. nr.
414	1-speed	3,1:1	E-coating + powder painting	strap	silver	• handle can be fitted both side • delivered with 4,6m strap	6S6169.002
414	1-speed	3,1:1	E-coating + powder painting	strap	black	• handle can be fitted both side • delivered with 7,6m strap	6S6244.002
800	1-speed	4,5:1	E-coating + powder painting	strap	black	• handle can be fitted both side • delivered with 7,6m strap • double gear	6S6408.002

WINCH STANDS - WITHOUT BRAKE

- Available roller colours: yellow, blue, black
- Please ask for article numbers!

Capacity (kg)	Speed	Gear ratio	Cover	Towing element	Colour	Remark	Art. nr.
950	1-speed	5:1	E-coating + powder painting	none	cover - black roller - blue	• suitable for strap • suitable for 70x70 sq.tube	6S6367.001
950	1-speed	5:1	hot-dip galvanized	none	roller - blue	• suitable for strap • suitable for 70x70 sq.tube	6S6367.002
1150	2-speed	4:1 / 8:1	E-coating + powder painting	none	cover -black roller -blue	• suitable for strap • suitable for 80x80 sq.tube	6S5810.001
1150	2-speed	4:1 / 8:1	hot-dip galvanized	none	roller - yellow	• suitable for strap • suitable for 80x80 sq.tube	6S5810.005

WINCHES - WITH BRAKE

1 2

3

4

5

№	Capacity (kg)	Speed	Gear ratio	Cover	Towing element	Colour	Remark	Art. nr.
1	680	1-speed	4,5:1	E-coating + powder painting	none	black	• automatic brake • suitable for wire-cable • 2 handles	6S6316.001
2	680	1-speed	4,5:1	E-coating + powder painting	none	black	• automatic brake • suitable for strap • 2 handles	6S6433.001
3	680	1-speed	4,5:1	E-coating + powder painting	none	black	• automatic brake • suitable for strap	6S6426.002
4	680	1-speed	4,5:1	E-coating + powder painting	none	black	• automatic brake • suitable for wire-cable	6S6431.002
5	1800	1-speed	19:1	E-coating + powder painting	none	black	• automatic brake • suitable for strap • 2 handles	6S6521.001

Strap and wire-cable for winches

Strap with hook

Capacity (kg)	Size	Art. nr.
450	1 mm × 50 mm × 7 m	6X1407.001
900	1 mm × 50 mm × 10 m	6X1407.002
1150	1,2 mm × 50 mm × 10 m	6X1407.003
675	1 mm × 48 mm × 6 m	6X1407.004
1150	1.2 mm × 50 mm × 6 m	6X1407.005
1575	1.2 mm × 65 mm × 6.5 m	6X1407.006

Wire-cable with safety hook

Capacity (kg)	Size	Art. nr.
450	Ø4 mm × 10 m	6X1522.001
900	Ø5 mm × 10 m	6X1522.002
1150	Ø5.3 mm × 10 m	6X1522.003
675	Ø4.76 mm × 10 m	6X1522.004
1150	Ø6.35 mm × 10 m	6X1522.005
1575	Ø7.14 mm × 10 m	6X1522.006

PLASTIC PARTS AND ROLLERS

Advantages of soft PVC 83 +/-3 Shore A material:

- corrosion resistant rollers with good physical properties
- insoluble in water, alcohol and saturated hydrocarbons
- non-flammable, wear resistant
- keeps its shape at high temperatures
- it is resilient to surface cracking
- resistant to UV radiation

This material provides a clear, transparent product that has a more superior design than the similar rollers. It is available in three different colors (yellow, blue and black).

Roller holders

We provide also roller holders for our rollers if needed.

Please contact our sales personnel about the available sizes.

WINCHES, ROLLERS, KEEL PADS AND MUDGUARDS MOUNTED ON TRAILERS

KNOTT
AUTÓFLEX-GROUP

ROLLER ASSEMBLY

Winch post

Bow roller assembly

1

2

3

4

5

Wobble roller assembly with bracket

№	Model	Roll material	Art. nr.
1	Winch post	PVC	6B7840.001
2	Winch post	PVC	6B4946.001
3	Bow roller assembly (blue, 8")	PVC	6B4950.002
4	Bow roller assembly (black, 8")	PVC	6B4776.004
5	Bow roller assembly (blue, 8")	PVC	6B4783.002
6	Wobble roller assembly	PVC	6B9685
7	Wobble roller assembly	PVC	6B9682

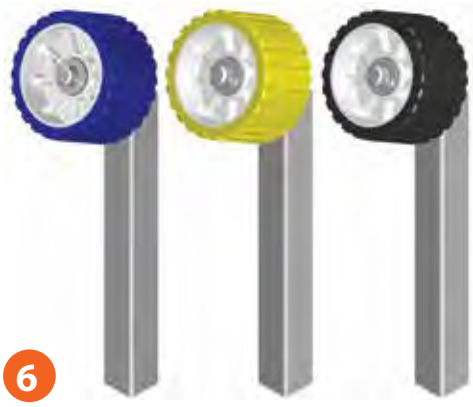
6

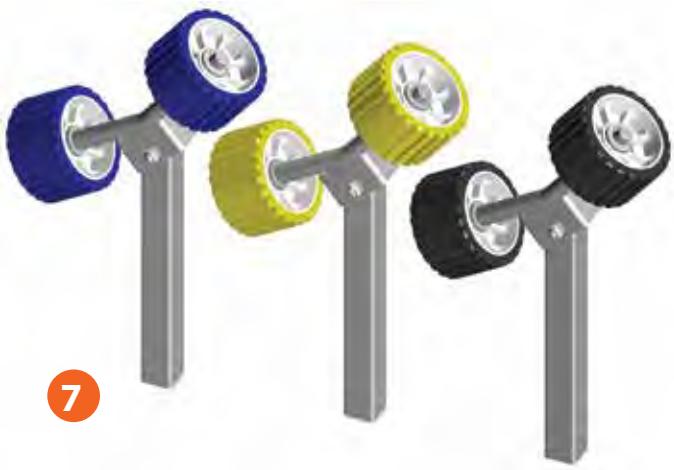
7

Adjustable roll system

- Optional roll colours: yellow, blue, black
- Different models: 4, 6 or 8 rollers
- Roll material: PVC

Colour	Axle (pcs)	Art. nr.
yellow	2	6B3510.003
blue	2	6B3510.103
black	2	6B3510.203
yellow	3	6B3510.002
blue	3	6B3510.102
black	3	6B3510.202
yellow	4	6B3510.001
blue	4	6B3510.101
black	4	6B3510.201

Bended axle with rollers

Colour	Axle (pcs)	Art. nr.
yellow	1	6B3508.001
blue	1	6B3508.101
black	1	6B3508.201

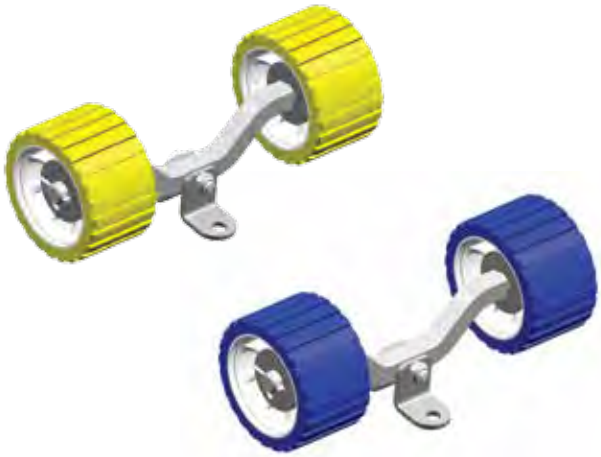

Bow rollers 3”

№	Model	Size (mm)	Colour	Material	Art. nr.
1.	Bow roller 3"	D=73, D1=49, d=14,5, L=72	blue	PVC ShA93	6X1064.013
2.	Bow roller 3"	D=73, D1=49, d=14,5, L=72	yellow	PVC ShA93	6X1064.012
3.	Bow roller 3"	D=73, D1=49, d=14,5, L=72	black	PVC ShA93	6X1064.029

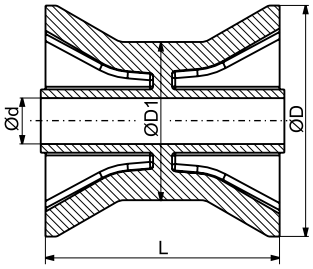

Bow rollers 3,5 - 4”

№	Model	Size (mm)	Colour	Material	Art. nr.
1.	Bow roller 3,5"	D=89, D1=71,5, d=14,3, L=97	blue	PVC ShA93	6X1643.001
2.	Bow roller 3,5"	D=89, D1=71,5, d=14,3, L=97	yellow	PVC ShA93	6X1643.002
3.	Bow roller 3,5"	D=89, D1=71,5, d=14,3, L=97	black	PVC ShA93	6X1643.003
4.	Bow roller 4"	D=87, D1=50, d=14,5, L=95	blue	PVC ShA93	6X1064.014
5.	Bow roller 4"	D=87, D1=50, d=14,5, L=95	yellow	PVC ShA93	6X1065.002
6.	Bow roller 4"	D=87, D1=50, d=14,5, L=95	black	PVC ShA93	6X1064.030

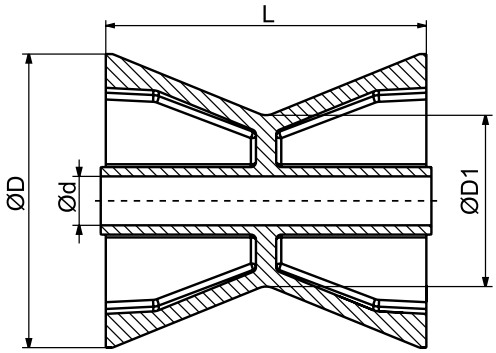

Keel rollers 8-12”

№	Model	Size (mm)	Colour	Material	Art. nr.
1.	Keel roller 5"	D=79, D1=58,5, d=17, L=133	blue	PVC Sha 93	6X1064.036
2.	Keel roller 5"	D=79, D1=58,5, d=17, L=133	yellow	PVC Sha 93	6X1064.038
3.	Keel roller 5"	D=79, D1=58,5, d=17, L=133	black	PVC Sha 93	6X1064.039
4.	Keel roller 8"	D=90, D1=61, d=17, L=194	blue	PVC Sha 93	6X1064.018
5.	Keel roller 8"	D=90, D1=61, d=17, L=194	yellow	PVC Sha 93	6X1064.004
6.	Keel roller 8"	D=90, D1=61, d=17, L=194	black	PVC Sha 93	6X1064.031
7.	Keel roller 10"	D=93, D1=61, d=17, L=259	blue	PVC Sha 93	6X1064.019
8.	Keel roller 10"	D=93, D1=61, d=17, L=259	yellow	PVC Sha 93	6X1064.005
9.	Keel roller 10"	D=93, D1=61, d=17, L=259	black	PVC Sha 93	6X1064.032
10.	Keel roller 12"	D=96, D1=62, d=17, L=305	blue	PVC Sha 93	6X1064.020
11.	Keel roller 12"	D=96, D1=62, d=17, L=305	yellow	PVC Sha 93	6X1064.006
12.	Keel roller 12"	D=96, D1=62, d=17, L=305	black	PVC Sha 93	6X1064.033

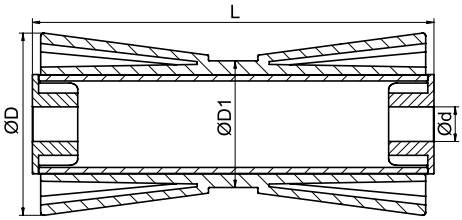

Keel rollers 4”

№	Model	Size (mm)	Colour	Material	Art. nr.
1.	Keel roller 4"	D=68,5, D1=42, d=16, L=98	blue	PVC Sha 93	6X1064.028
2.	Keel roller 4"	D=68,5, D1=42, d=16, L=98	yellow	PVC Sha 93	6X1064.035
3.	Keel roller 4"	D=68,5, D1=42, d=16, L=98	black	PVC Sha 93	6X1064.034

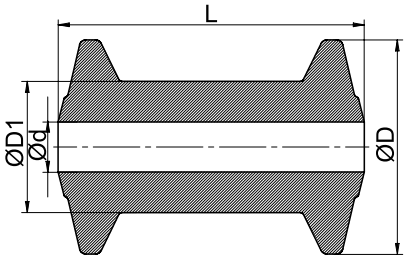

Keel rollers

Model	Size (mm)	Colour	Material	Art. nr.
Keel roller 7"	D=121, D1=70, d=17, L=197	blue	PVC ShA 95	6X1064.026

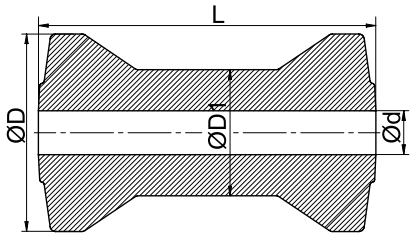

№	Model	Size (mm)	Colour	Material	Art. nr.
1	Keel roller 6"	D=58, D1=40,5, d=19, L=154	black	PVC ShA 95	6X1064.040
2	Keel roller 7,5"	D=68, D1=43, d=21, L=188	black	PA6 GF30	6X1064.043
3	Keel roller 12"	D=80, D1=56, d=21, L=290	black	PVC ShA 95	6X1064.037

1

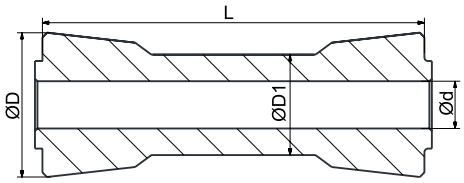

2

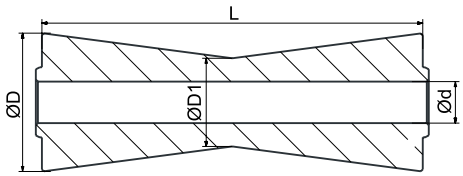

3

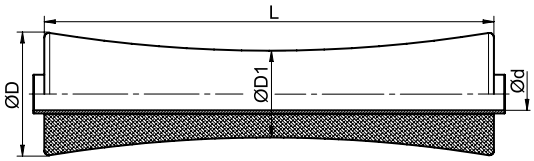

End caps & end bells

№	Model	Size (mm)	Colour	Material	Art. nr.
1	End cap 3"	D=72,5, d=14,3, L=30	blue	PVC ShA 93	6X1067.010
2	End cap 3"	D=72,5, d=14,3, L=30	yellow	PVC ShA 93	6X1067.001
3	End cap 3"	D=72,5, d=14,3, L=30	black	PVC ShA 93	6X1067.025
4	End cap 4"	D=88, d=14,3, L=35	blue	PVC ShA 93	6X1067.009
5	End cap 4"	D=88, d=14,3, L=35	yellow	PVC ShA 93	6X1067.008
6	End cap 4"	D=88, d=14,3, L=35	black	PVC ShA 93	6X1067.024

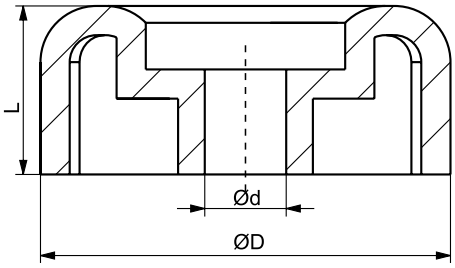

№	Model	Size (mm)	Colour	Material	Art. nr.
7	End cap 3,5"	D=94, D1=91,5, d=13, L=33	blue	PVC ShA 93	6X1067.028
8	End cap 3,5"	D=94, D1=91,5, d=13, L=33	yellow	PVC ShA 93	6X1067.029
9	End cap 3,5"	D=94, D1=91,5, d=13, L=33	black	PVC ShA 93	6X1067.030

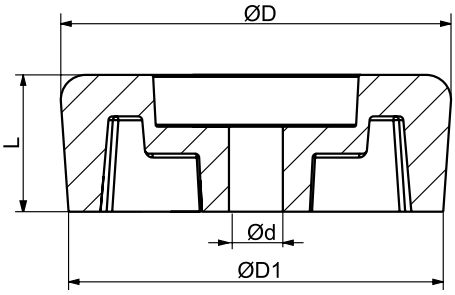

№	Model	Size (mm)	Colour	Material	Art. nr.
1	End bell 3"	D=120, d=14, L=39	blue	PVC ShA 93	6X1066.003
2	End bell 3"	D=120, d=14, L=39	yellow	PVC ShA 93	6X1066.001
3	End bell 3"	D=120, d=14, L=39	black	PVC ShA 93	6X1066.005
4	End bell 4"	D=130, d=14, L=40	blue	PVC ShA 93	6X1066.004
5	End bell 4"	D=130, d=14, L=40	yellow	PVC ShA 93	6X1066.002
6	End bell 4"	D=130, d=14, L=40	black	PVC ShA 93	6X1066.006

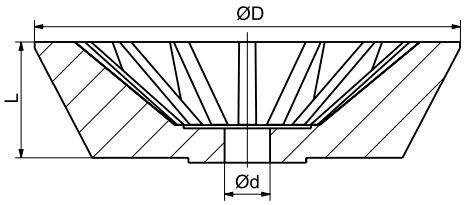

Side guide rollers

№	Model	Size (mm)	Colour	Art. nr.
1	Side guide roller 2,5"×8 3/4"	D=63, d=19, L=220	blue	6X1065.026
2	Side guide roller 2,5"×8 3/4"	D=63, d=19, L=220	yellow	6X1065.025
3	Side guide roller 2,5"×8 3/4"	D=63, d=19, L=220	black	6X1065.024

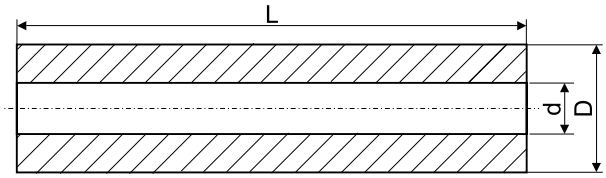

■ Material: PVC ShA 93

Side guide rollers

№	Model	Size (mm)	Colour	Art. nr.
1	Side guide roller ROTO	D=87, D1=58, d=23, L=177	blue	6X1067.036
2	Side guide roller ROTO	D=87, D1=58, d=23, L=177	yellow	6X1067.035
3	Side guide roller ROTO	D=87, D1=58, d=23, L=177	black	6X1067.037

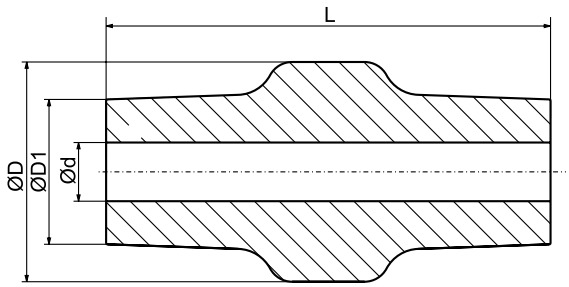

■ Material: PVC ShA 93

Wobble rollers

№	Model	Size (mm)	Colour	Art. nr.
1	Wobble roller 5"	D=128; d=26; d1=29; L=75	white	6X1067.099
2	Wobble roller 5"	D=128, d=20,5, L=75	yellow	6X1067.022
3	Wobble roller 5"	D=128, d=20,5, L=75	black	6X1067.014
4	Wobble roller 5"	D=128, d=22, L=75	blue	6X1067.021
5	Wobble roller 5"	D=128, d=22, L=75	yellow	6X1067.023
6	Wobble roller 5"	D=128, d=22, L=75	black	6X1067.027
7	Wobble roller 5"	D=128, d=26, L=75	blue	6X1067.015
8	Wobble roller 5"	D=128, d=26, L=75	yellow	6X1067.011
9	Wobble roller 5"	D=128, d=26, L=75	black	6X1067.026

■ Material: PVC ShA 93

1 4 7

2 5 8

3 6 9

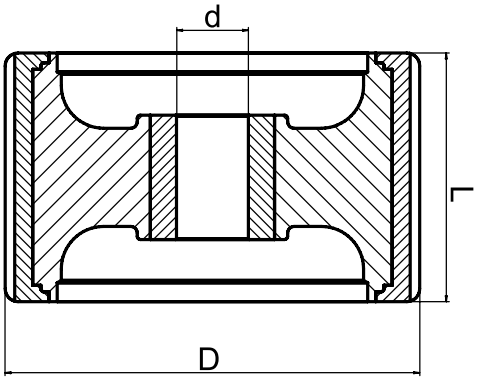

№	Model	Size (mm)	Colour	Art. nr.
10	Wobble roller 5"	D=128; d=26; d1=29; L=75	white	6X1067.099

■ Material: PVC ShA 93

10

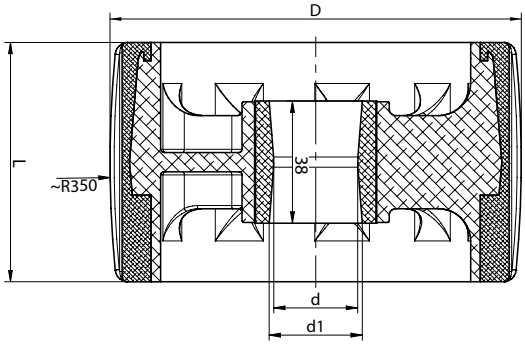

№	Model	Size (mm)	Colour	Article number
11	Wobble roller	D=121; d=21; d1=28; L=81	black	6S6029.001
12	Wobble roller	D=121; d=21; d1=28; L=81	gray	6S6029.002

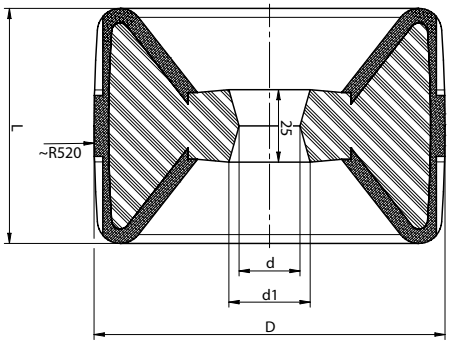

11 12

Keel pad

№	Model	Size (mm)	Colour	Art. nr.
1	Keel pad 2"×12"	A=300, B=67, C=54	blue	6X1065.028
2	Keel pad 2"×12"	A=300, B=67, C=54	yellow	6X1065.029
3	Keel pad 2"×12"	A=300, B=67, C=54	black	6X1065.030
2	Keel pad 2,5"×12"	A=300, B=75,C=64	blue	6X1065.012
3	Keel pad 2,5"×12"	A=300, B=75, C=64	yellow	6X1065.011
4	Keel pad 2,5"×12"	A=300, B=75, C=64	black	6X1065.023
5	Keel pad 3"×12"	A=300, B=92, C=80	blue	6X1065.010
6	Keel pad 3"×12"	A=300, B=92, C=80	yellow	6X1065.009
7	Keel pad 3"×12"	A=300, B=92, C=80	black	6X1065.022

■ Material: PVC ShA 93

V bow stop

№	Model	Size (mm)	Colour	Art. nr.
1	V Bow stop	A=115, B=72, C=90, D=52,5, E=36, F=13	blue	6X1065.016
2	V Bow stop	A=115, B=72, C=90, D=52,5, E=36, F=13	yellow	6X1065.018
3	V Bow stop	A=115, B=72, C=90, D=52,5, E=36, F=13	black	6X1065.017

1 2 3

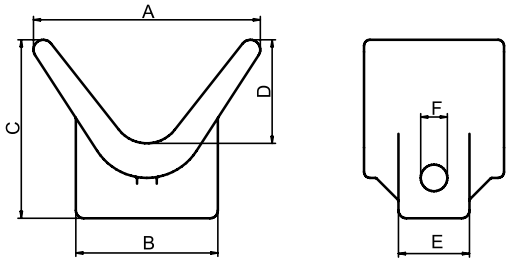

■ Material: PVC ShA 93

Plastic chock and braket

Type	Lenght A (mm)	Height H (mm)	Width B (mm)	Colour	Art. nr.
Chock	220	100	90	white	401953.998
Chock	220	100	90	black	401953.999
Bracket	170	20	95	white	401954.998
Bracket	170	20	95	black	401954.999

Plastic chock and bracket, NEW

Type	Lenght A (mm)	Height H (mm)	Width B (mm)	Colour	Load capacity	Art. nr.
Chock	237	101	110	black	800 kg/wheel	6BH886.001
Chock	237	101	110	white	800 kg/wheel	6BH886.002
Chock	237	101	110	black	1000 kg/wheel	6BJ653.001
Chock	237	101	110	white	1000 kg/wheel	6BJ653.002
Bracket	179	20,5	125	black	-	6BH887.001
Bracket	179	20,5	125	white	-	6BH887.002
Bracket	179	20,5	125	black	-	6BJ654.001
Bracket	179	20,5	125	white	-	6BJ654.002

Channel glide bunk cover

Type	Lenght A (mm)	Height H (mm)	Width B (mm)	Colour	Art. nr.
Bunk cover	2000	43	98	gray	6S60132000
Bunk cover	2200	43	98	gray	6S60132200
Bunk cover	3000	43	98	gray	6S60133000
Bunk cover	2000	43	148	gray	6S60142000
Bunk cover	2200	43	148	gray	6S60142200
Bunk cover	3000	43	148	gray	6S60143000
Bunk cover	2000	43	98	blue	6S66582000
Bunk cover	2200	43	98	blue	6S66582200
Bunk cover	3000	43	98	blue	6S66583000
Bunk cover	2000	43	148	blue	6S66592000
Bunk cover	2200	43	148	blue	6S66592200
Bunk cover	3000	43	148	blue	6S66593000
Bunk cover	2000	43	98	rubin red	6S68472000
Bunk cover	2200	43	98	rubin red	6S68472200
Bunk cover	3000	43	98	rubin red	6S68473000

- Our plastic bunk covers attach over bunks and lets your boat slide on and off the trailer with ease.

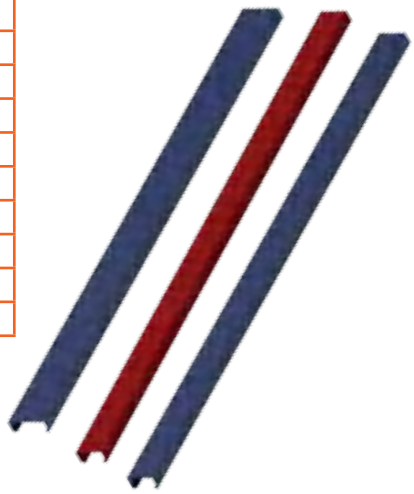

- Material: PP

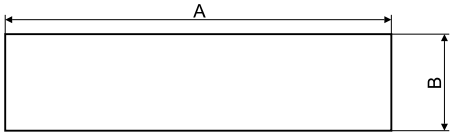

Bunk cover end

Type	Height B (mm)	Width A (mm)	Colour	Art. Nr.
Bunk cover end	43	98	blue	6S6372.001
Bunk cover end	43	98	gray	6S6372.002
Bunk cover end	43	98	ruby red	6S6372.003
Bunk cover end	43	98	anthracite gray	6S6372.004
Bunk cover end	43	148	blue	6S6373.001
Bunk cover end	43	148	gray	6S6373.002
Bunk cover end	43	148	ruby red	6S6373.003
Bunk cover end	43	148	anthracite gray	6S6373.004

SPARE PARTS FOR HORSE TRAILERS

When the sun heats up the interior of the trailer, the air flows through the sunroof window.
The wind creates a vacuum, the roof window suction effect is created, thus the warm air can flow out through the roof window of the trailer.
The sunroof can be opened by pushing it upwards. Our sunroof has a lifetime guarantee, except the glass.

№	Type	Cutting size (mm)	Window material	Art. nr.
1	SUNLux	710×345/R60	Plastic	6X0638.006
2	Zenit	763×397/R60	Plastic	6X0638.010
3	LA 4LK003_00	480×330/R40	Plastic	6X1729.002
4	BA 4BK001_00	790×590/R100	Plastic	6X0638.008
5	BA 4BK003_00	790×590/R100	Glass	6X0638.004
6	BA 4BK002_00	914×537/R100	Plastic	6X0638.011
7	BA 4BK008_00	790×590/R100	Metal	6X0638.015

- Frame material: plastic

1

2

3

4 6

5

7

Separation bar, welded

- Hot-dip galvanized
- Available in different sizes
- Art. nr.: **6B7058.001**

LIGHTING

REAR 3-FUNCTION LED LIGHT

The 3-function universal rear LED light:
- has a low power consumption
- European E9 homologation
- the lamp is homologated to be mounted horizontally and vertically as well
- ElectroMagnetic Compatibility – EMC certificate
- shock-resistant – PC lampshade
- reverse polarity protection system

Lamp functions:
- rear position light
- STOP light
- indicator

Technical specification:
- supply voltage: 12-36V DC
- operating temperature: – 40°C to +55°C
- lamp is resistant to any weather conditions
- lamp is fully airtight

Power consumption:
- rear position light 12V/24V = 0,04A/0,02A
- STOP light 12V/24V = 0,2A/0,1A
- indicator 12V/24V = 0,25A/0,125A
- rear position light 12V/24V = 0,5W/0,5W
- STOP light 12V/24V = 2,4W/2,4W
- indicator 12V/24V = 3W/3W

FT-032 LED

Description	Functions	Foreign key	Art. nr.
Universal LED rear lamp with a bayonet connector, tinted lampshade	• indicator • stop light • rear position light	FT-032 LED B	6X1354.114
Universal LED rear lamp with a bayonet connector and an additional fog- or reverse light power supply cable, tinted lampshade	• indicator • stop light • rear position light	FT-032 LED B PM	6X1354.086

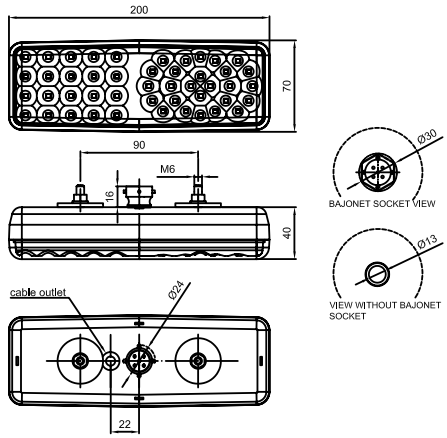

FT-121 LED

Description	Functions	Foreign key	Art. nr.
Universal LED rear lamp 12-36V, 3-functional, colorless lampshade, yellow indicator, 5PIN bayonet connector	• indicator • stop light • rear position light	FT-121 LED B	6X1354.199

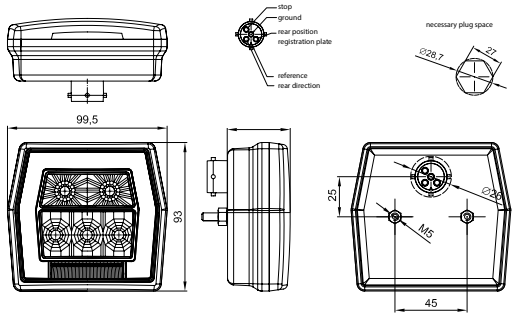

REAR 7-FUNCTION LED LIGHT

The 7-function universal LED light:
- has a low power consumption
- european homologation E9
- ElectroMagnetic Compatibility (EMC) homologation
- shock-resistant – PC lampshade
- reverse polarity protection system

Lamp functions:
- rear running light
- licence plate light
- STOP light
- indicator
- fog light
- reflector
- reverse light

Technical specification:
- supply voltage: 12-36V DC
- operating temperature: – 40°C to +55°C
- resistant to any weather condition
- fully airtight

Power consumption:
- rear running light + licence plate light – 12V/ 24V = 0,25A/ 0,2A
- STOP light – 12V/ 24V = 0,08A/0,08A
- indicator – 12V/ 24V = 0,12A/0,12A
- reverse light – 12V/ 24V = 0,2A/ 0,1A
- fog light – 12V/ 24V = 0,15A/ 0,08A

Power consumption / Estimated power:
- rear running light + licence plate light – 12/ 24V = 3W/ 5W
- STOP light – 12V/ 24V = 1W/ 2W
- indicator – 12V/ 24V = 1,5W/ 3W
- reverse light – 12/ 24V = 2,5W/2,5W
- fog light – 12V/ 24V = 2W/2W

FT-170 LED

Description	Functions	Foreign key	Art. nr.
Universal rear LED light 12-36V, 7-function, **left side plate light,** 6 PIN bayonet connector	• rear running light • licence plate light • STOP light • indicator • fog light • reflector • reverse light	FT-170 L TB LED	6X1354.230
Universal rear LED light 12-36V, 7-function, **right side plate light,** 6PIN bayonet connector		FT-170 P TB LED	6X1354.231

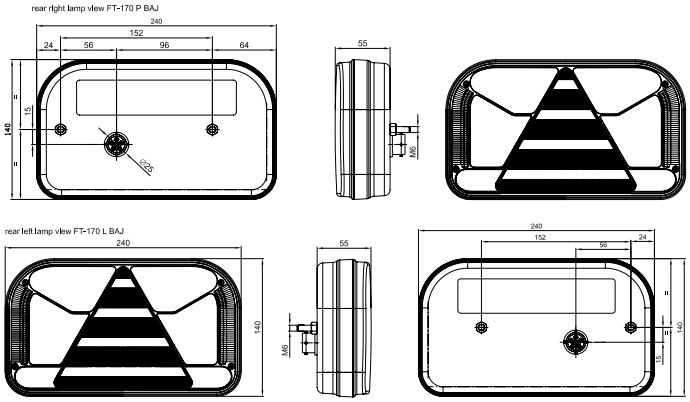

FT-110 LED

Description	Functions	Foreign key	Art. nr.
Universal 3-functional rear LED light 12/ 24V, round, 5 PIN bayonet connector	• indicator • stop light • rear position light	FT-110 LED B	6X1354.221

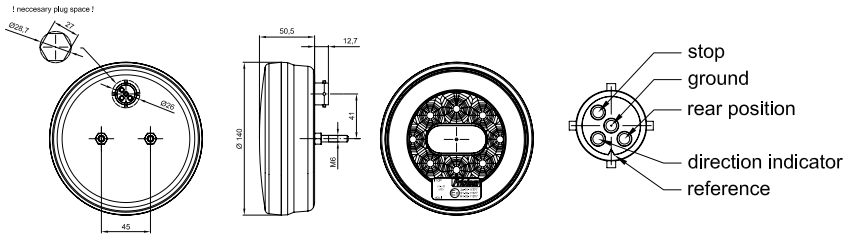

REAR MULTIFUNCTION LIGHT

FT-002

Description	Functions	Foreign key	Art. nr.
Left rear lamp with a fog light and a licence plate light.	• STOP light • indicator • rear running light • licence plate light • fog light	FT-002L	6X1354.055
Right rear lamp with a reverse light and a licence plate light.	• STOP light • indicator • rear running light • licence plate light • reverse light	FT-002P	6X1354.056

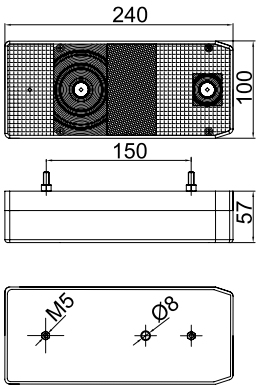

MD-002

Description	Functions	Foreign key	Art. nr.
Left rear light with a licence plate light	STOP light • indicator • rear running light • licence plate light	MD-002 L	6X1354.001
Right rear light without a licence plate light	STOP light • indicator • rear running light • without licence plate light	MD-002 P	6X1354.002
Left rear light nwith a licence plate light and a 5PIN bayonet connector	STOP light • indicator • rear running light • licence plate light • all cables and bulbs are assembled	MD-002 L B	6X1354.013
Right rear light without a number plate light, with a 5PIN bayonet connector	STOP light • indicator • rear running light • all cables and bulbs are assembled	MD-002 P B	6X1354.102

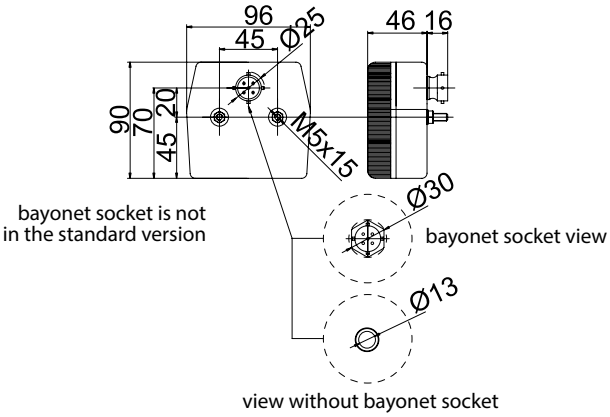

REAR LIGHT WITH REFLECTING TRIANGLE

FT-088

Description	Functions	Foreign key	Art. nr.
Left rear lamp with fog light and 5PIN bayonet connector	STOP light • indicator • rear running light • licence plate light • fog light • retro reflector • cables and bulbs assembled	FT-088 LPM B	6X1354.014
Right rear lamp with reverse light and 5PIN bayonet connector	STOP light • indicator • rear running light • licence plate light • reverse light • retro reflector • cables and bulbs assembled	FT-088 PCOF B	6X1354.015
Left rear lamp with reverse light and bayonet connector	STOP light • indicator • rear running light • licence plate light • reverse light • retro reflector • 5 pin bayonet plug • cables and bulbs assembled	FT-088 LCOF B	6X1354.025
Right rear lamp with fog light and 5PIN bayonet connector	STOP light • indicator • rear running light • licence plate light • fog light • retro reflector • cables and bulbs assembled	FT-088 PPM B	6X1354.026
Left lamp with fog light and licence plate light	STOP light • indicator • rear running light • licence plate light • fog light • retro reflector • mass cable assembled • bulbs not included	FT-088 LPM	6X1354.037
Right rear lamp with reverse light and licence plate light	STOP light • indicator • rear running light • licence plate light • reverse light • retro reflector • mass cable assembled • bulbs not included	FT-088 PCOF	6X1354.038
Left rear lamp with reverse light and licence plate light	STOP light • indicator • rear running light • licence plate light • reverse light • retro reflector • mass cable assembled • bulbs not included	FT-088 LCOF	6X1354.039
Right rear lamp with fog light and licence plate light	STOP light • indicator • rear running light • licence plate light • fog light • retro reflector • mass cable assembled • bulbs not included	FT-088 PPM	6X1354.040

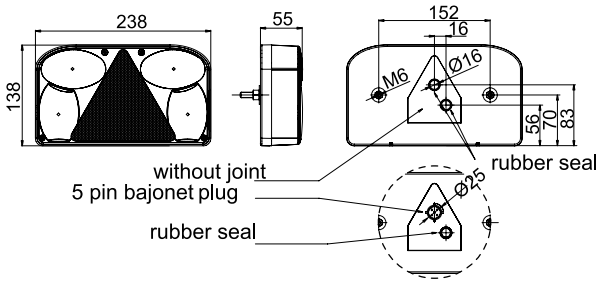

FT-077

Description	Functions	Foreign key	Art. nr.
Left lamp with fog light	STOP light • indicator • rear running light • licence plate light • fog light • retro reflector • mass cable assembled • bulbs not included	FT-077 LPM	6X1354.051
Right lamp with fog light	STOP light • indicator • rear running light • licence plate light • fog light • retro reflector • mass cable assembled • bulbs not included	FT-077 PPM	6X1354.052
Left lamp with fog light & 5PIN bayonet connector	STOP light • indicator • rear running light • licence plate light • fog light • retro reflector • cables and bulbs assembled	FT-077 LPM B	6X1354.053
Right lamp with fog light & 5PIN bayonet connector	STOP light • indicator • rear running light • licence plate light • fog light • retro reflector • cables and bulbs assembled	FT-077 PPM B	6X1354.054

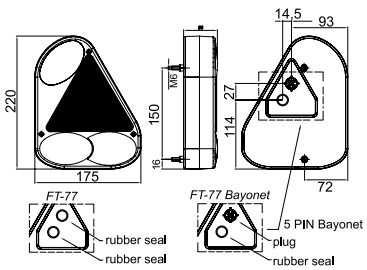

TRAILER REAR LIGHT

MD - 036

Description	Functions	Foreign key	Art. nr.
Left rear lamp with fog light and licence plate light	STOP light • indicator • rear running light • licence plate light • fog light • retro reflector	MD-036 L	6X1354.003
Right rear lamp with reverse light and licence plate light	STOP light • indicator • rear running light • licence plate light • reversing light • retro reflector	MD-036 P	6X1354.004
Left rear lamp with fog light, licence plate light, 5 PIN bayonet connector and bulb	STOP light • indicator • rear running light • licence plate light • fog light • retro reflector • cables and bulbs assemblied	MD-036 LB B	6X1354.062
Right rear lamp with white lampshade, 5 PIN bayonet connector and bulb	STOP light • indicator • rear running light • licence plate light • reverse light • retro reflector • cables and bulbs assembled	MD-036 PB B	6X1354.063

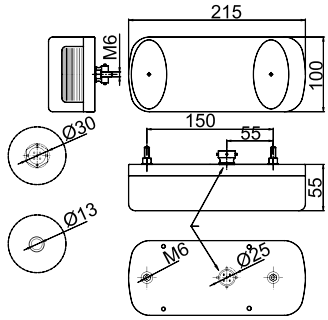

MD - 035 Rear fog light

Description	Functions	Foreign key	Art. nr.
Fog light	fog light • screw mounted	MD-035 S	6X1354.099
Fog light	fog light • with mounting bracket	MD-035 P	6X1354.101

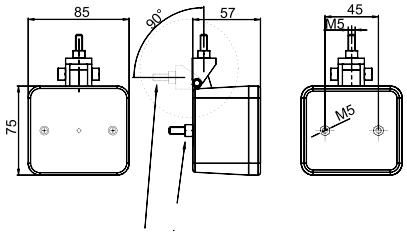

Licence plate light

Description	Functions	Foreign key	Art. nr.
Licence plate light	licence plate light • filament lamp C5W	MD-021	6X1354.033
Licence plate light with cable	licence plate lamp with sidelight • 2x0,75 mm² cable	FT-037 P	6X1354.073

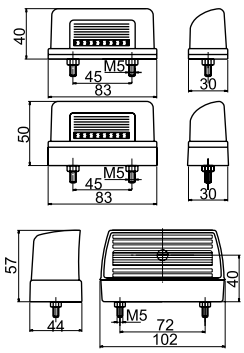

UNIVERSAL POSITION LIGHT

Description	Functions	Foreign key	Art. nr.
Universal position light	marking / clearance light • filament lamp C5W • white	FT-008 B	6X1354.079

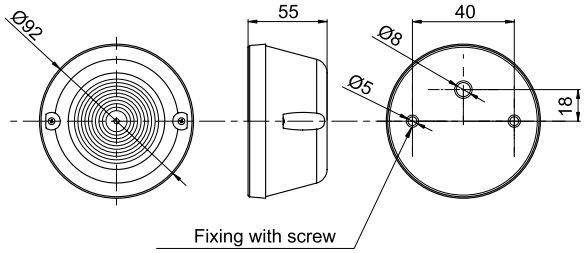

Universal position light with reflector

Description	Functions	Foreign key	Art. nr.
Universal position light	marking / clearance light • retro reflector (white)	FT-001 B	6X1354.006
Universal sidemarking light	marking / clearance light • retro reflector (yellow)	FT-001 Z	6X1354.007

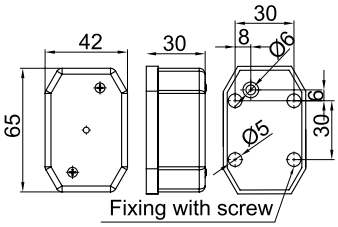

Clearance LED light

Description	Functions	Foreign key	Art. nr.
End outline marking LED light	marking / clearance ligh • retro reflector (white + red)	FT-009 D	6X1354.046
End outline marking LED light	marking / clearance light • retro reflector (white + red)	FT-009 F	6X1354.047

The 2-functional LED clearance lamp is fullfilling highest quality standards.

- mounted with rubber bracket integrated flat cable 2×0,75 mm²
- voltage supply: 12-36 V DC
- optional polarity connection

Extremely small power consumption:

- 12 V cirquit: 12V(0,04A) = 0,5W
- 24 V cirquit: 24V(0,04A) = 1W

Working temperature:

- -40°C to +55°C

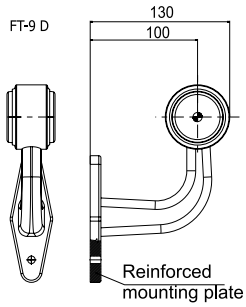

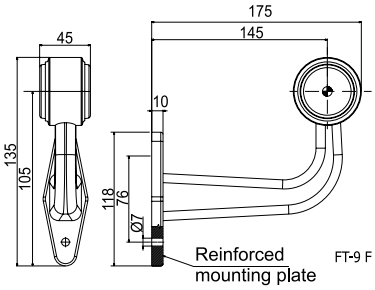

UNIVERSAL POSITION LED LIGHT

Description	Functions	Foreign key	Art. nr.
Universal position LED light	marking / clearance light • white	MD-013 B+K	6X1354.044
Universal side marking LED light	marking / clearance light • yellow	MD-013 Z+K	6X1354.045
Universal position LED light	marking / clearance light • white	FT-019 B	6X1354.087
Universal side marking LED light	marking / clearance light • yellow	FT-019 Z	6X1354.088
Universal rear position LED light	marking / clearance light • red	FT-019 C	6X1354.089
Universal position LED light	marking / clearance light • holding bracket • white	FT-019 B+K	6X1354.090
Universal side marking LED light	marking / clearance light • holding bracket • yellow	FT-019 Z+K	6X1354.091
Universal rear position LED light	marking / clearance light • holding bracket • red	FT-019 C+K	6X1354.092

Universal side marking amber LED light with reflector is fullfilling highest quality standards.

- holding bracket
- integrated cable 2x0,75 mm²
- voltage range 12-30 V DC
- non-polarised

Extreme small power consumption:

- 12 V cirquit 12V(0,04A) = 0,5W
- 24 V cirquit 24V(0,04A) = 1W

Working temperature:

- -40°C to +100°C

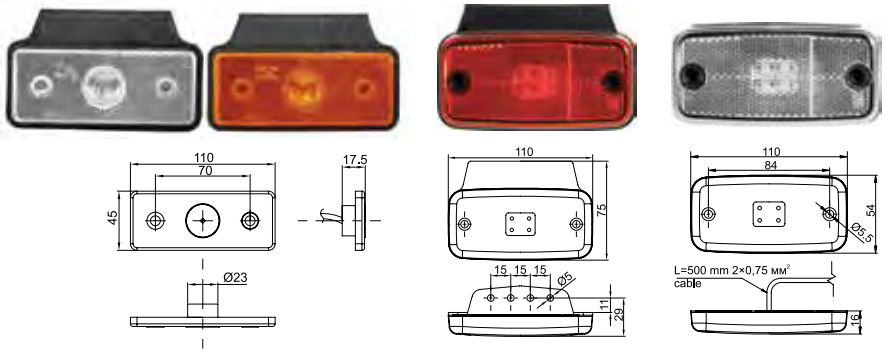

Description	Functions	Foreign key	Art. nr.
Universal position LED light	marking / clearance light • white	FT-027 B	6X1354.096
Universal side marking LED light	marking / clearance light • yellow	FT-027 Z	6X1354.097
Universal rear position LED light	marking / clearance light • red	FT-027 C	6X1354.098

Type	Functions	Foreign key	Art. nr.
Universal position LED light	marking / clearance light • white	FT-017 B	6X1354.011
Universal side marking LED light	marking / clearance light • yellow	FT-017 Z	6X1354.094
Universal rear position LED light	marking / clearance light • red	FT-017 C	6X1354.095

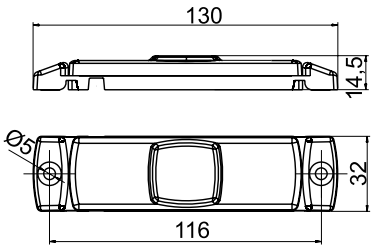

REFLECTING DEVICES

Triangular reflectors

Description	Functions	Foreign key	Art. nr.
Triangular retro reflector	screw mounting • red	DOB-031	6X1354.005
Triangular retro reflector	with fixing bolt • red	DOB-030A	6X1354.045

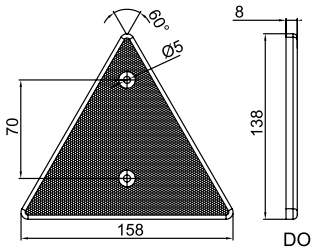

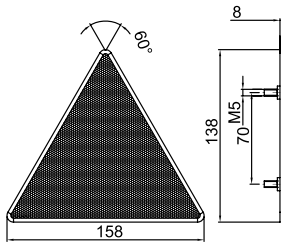

Round reflectors

Description	Functions	Foreign key	Art. nr.
Front retro reflector	round (Ø80 mm) • with fixing bolt • white	DOB-039A B	6X1354.060
Side retro reflector	round (Ø80 mm) • with fixing bolt • yellow	DOB-039A Z	6X1354.061
Rear retro reflector	round (Ø80 mm) • screw mounted • red	DOB-039 C	6X1354.072
Front retro reflector	round (Ø80 mm) • screw mounted • white	DOB-039 B	6X1354.027
Side retro reflector	round (Ø80 mm) • screw mounted • yellow	DOB-039 Z	6X1354.028
Front retro reflector	round (Ø60 mm) • self-adhesive • white	DOB-032 B	6X1354.029
Side retro reflector	round (Ø60 mm) • self-adhesive • yellow	DOB-032 Z	6X1354.030
Front retro reflector	round (Ø60 mm) • screw mounted • white	DOB-033 B	6X1354.023
Side retro reflector	round (Ø60 mm) • screw mounted • yellow	DOB-033 Z	6X1354.032

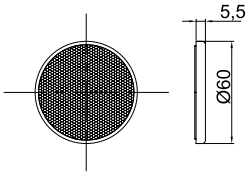

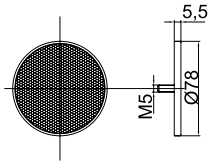

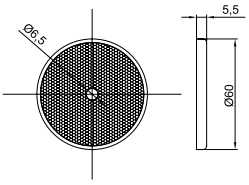

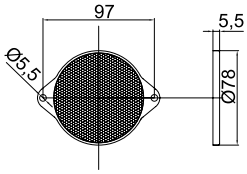

Rectangular reflectors

Description	Functions	Foreign key	Art. nr.
Front retro reflector	rectangular • self-adhesive • white	DOB-035 B	6X1354.008
Side retro reflector	rectangular • self-adhesive • yellow	DOB-035 Z	6X1354.009
Side retro reflector	rectangular • screw mounted • yellow	DOB-034 Z	6X1354.058
Front retro reflector	rectangular • screw mounted • white	DOB-034 B	6X1354.059

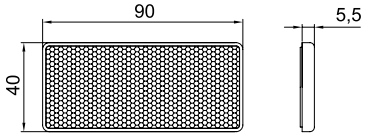

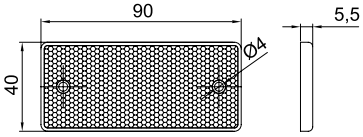

ACCESSORIES

Plug, socket and holder

№	Type	Rated load	Material	Art. nr.
1	7-pin Plug	12V / 24V	plastic housing	6X1766.002
2	7-pin Socket	12V / 24V	plastic housing	6X1766.003
3	Socket boot		solid rubber	6X1766.004
4	13 - 7 Adapter	12V / 24V	plastic housing	6X1766.005
5	13-pin Socket	12V / 24V	plastic housing	6X1766.006
6	13-pin Plug	12V / 24V	plastic housing	6X1766.007
7	7 - 13 Adapter	12V / 24V	plastic housing	6X1766.008
8	Plug holder		FeZn	6B0891.001
9	Plug holder		stainless steel	6X1395.003
10	7-pin Plug holder		spring-steel, FeZn	6E5098.001
11	13-pin Plug holder		spring-steel, FeZn	6E5324.001

5-Pole bayonet

Type	Foreign key	Art. nr.
Bayonet plug for light on the right side	WTY P	6X1354.064
Bayonet plug for light on the left side	WTY L	6X1354.065

Mounted cable set

Type	Length	Foreign key	Art. nr.
7-pin main cable, fog light on the left side	4 m	IA-040-000	6X1354.016
7-pin main cable, fog light on the left side	5 m	IA-050-000	6X1354.017
7-pin main cable, fog light on the left side	7 m	IA-070-000	6X1354.019
7-pin main cable, fog light on the left side, extensions: /L2	5 m / L2: 3,1 m	IIIA-050-031	6X1354.066
7-pin main cable, fog light on the left side, extensions: /L2	7 m / L2: 5,5 m	IIIA-070-055	6X1354.067
7-pin main cable, fog light on the left side, extensions: /L2	8 m / L2: 6 m	IIIA-080-060	6X1354.068
7-pin main cable, fog light on the left side	9 m	IIIA-090-000	6X1354.069
7-pin main cable, fog light on the left side, extensions: /L2	7 m / L2: 0,2 m	IIIA-070-020	6X1354.070
7-pin main cable, fog light on the left side, extensions: /L2	8 m / L2: 0,2 m	IIIA-080-020	6X1354.071

LED CONTROL BOX

The LED control box grants the original trailer light indicator-control system's correct operation for trailers provided with Fristom LED lighting equipment while keeping the LED lighting's most important advantage: energy saving.

Type	Function	Art. nr.
LED control Box	7p/12V	6X1354.216
LED control Box	13p/12V	6X1354.217

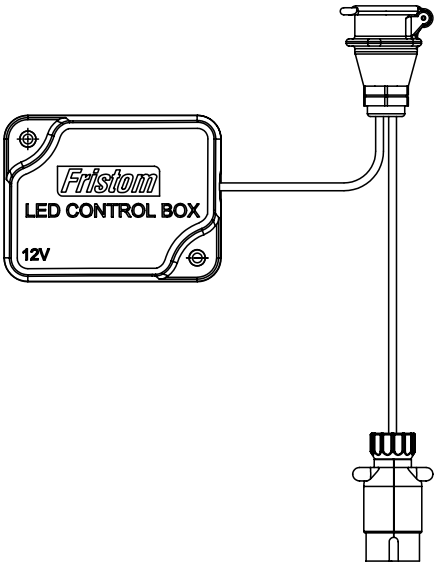

Tester for 7-PIN plug and socket connection

The tester on one side has the 7-pin plug for the trailer and on the other side the 7-pin socket for the car. The tester quickly indicates if the wiring of the car or the trailer is not working correctly.

Trailer (caravan or bicycle carrier) connection testing:

1. Put the plug in the connection of the tester.
2. Press the yellow button on the side of the tester.
3. If the wiring is right, all the LEDs light up.

LED functions:

1. indicator on the left (yellow)
2. foglight or 12V (blue)
3. mass (white)
4. indicator on the right (green)*
5. rearlight on the right (brown)
6. brake light (red)
7. rearlight on the left (black)

** If a LED doesn't light up, the corresponding wire is defective. If all the LEDs light up, the defect is at the vehicle.*

Car / camper connection testing

1. Plug the tester in the car's socket.
2. Press the yellow button on the side of the tester.
3. If the wiring is working correctly, all the LEDs light up.

Description	Function	Art. nr.
Trailer lighting tester	7p/12V	502207

	Problem	Trailer	Car (when pressing the yellow button)
1	Some LEDs do not light up.	Wire damaged or bulb defective. Bad contact.	Wire damaged or bulb defective. Bad contact.
2	None of the LEDs light up.	Mass wire damaged or all bulbs defective. Check the battery of the tester.	Mass wire damaged or all bulbs defective. Check the battery of the tester.
3	One or more LEDs are weak or twinkle.	Wire damaged or the socket is dirty.	Wire damaged or the socket is dirty.
4	All the LEDs are weak or twinkle.	Mass wire damaged. Check the tester battery.	Mass wire damaged. Check the tester battery.
5	The lights of the trailer do not light up but the LEDs do.	Short circuit in the trailer wiring. The fuses will break.	

Important notes!

Important notes!

Important notes!

Important notes!

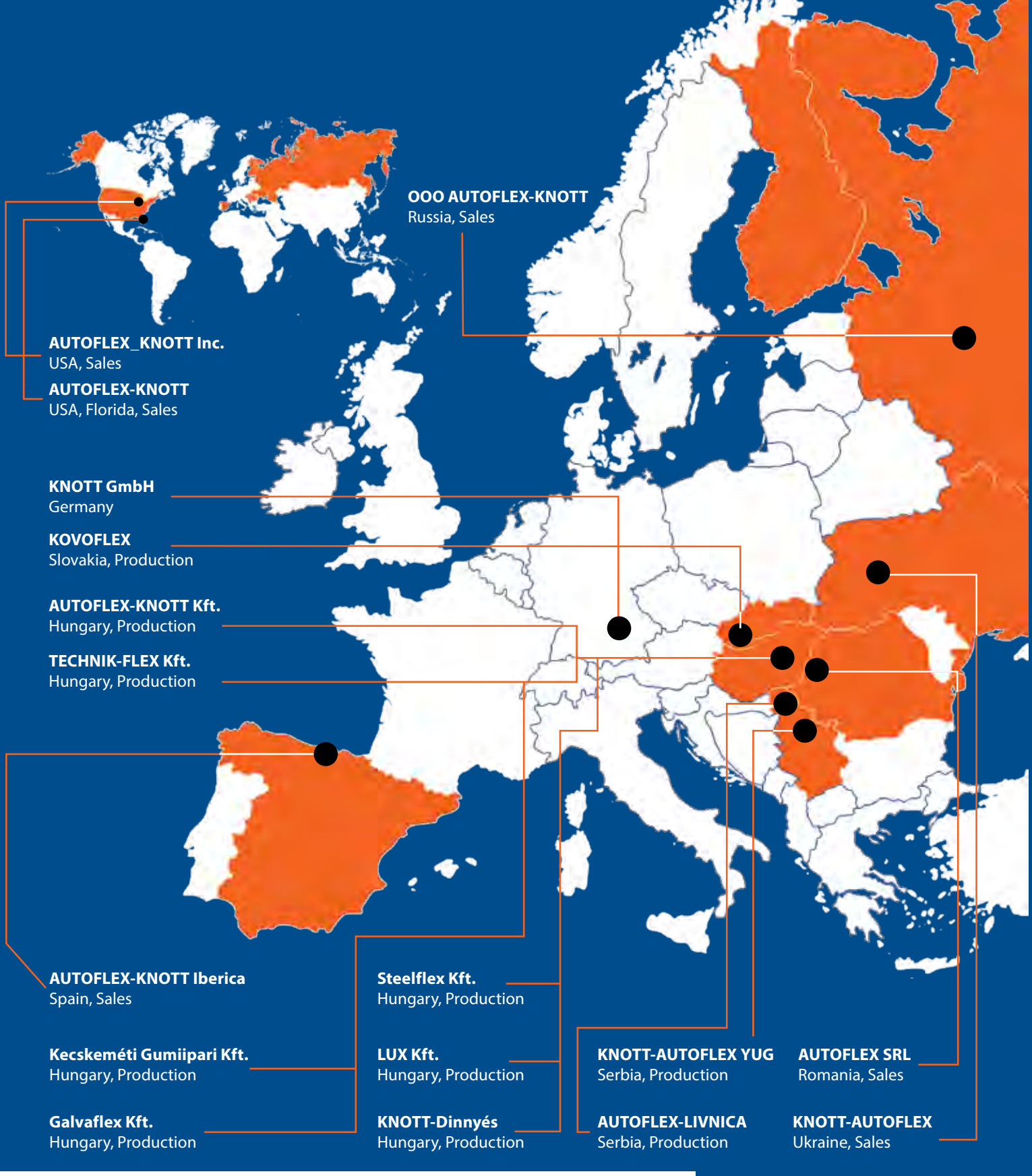

KNOTT
AUTÓFLEX-GROUP

Kecskemét,
Kadafalva-Heliport
Központ
Tel.: (+36) 76/481-515
Fax: (+36) 76/481-494
e-mail: info@autoflex.hu

www.autoflex-knott.com